iinno lighting

Landscape street lights

Designing your lighting solutions

Landscape / Street pole light
B9BRY0126 @8.6W×3

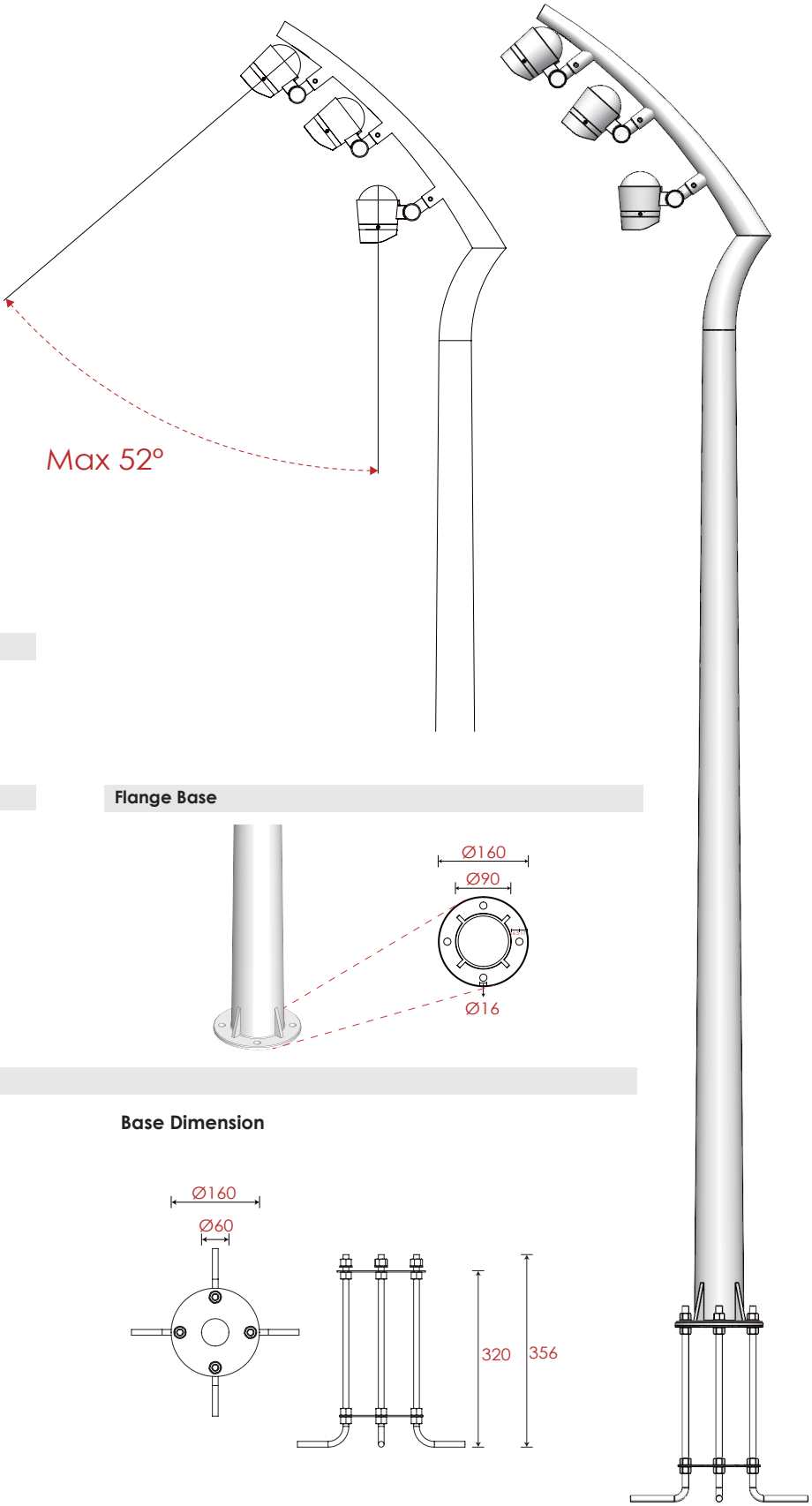

Pole Dimension & Material

Diameter : Ø90mm (Max)
Height : 2400 mm (Customizeable)
Material : Iron

Painting Color

Basic
Sanded Grey
KAL 7042

Secondary
Sanded Black
RAL 9005

Flange Base

Accessories

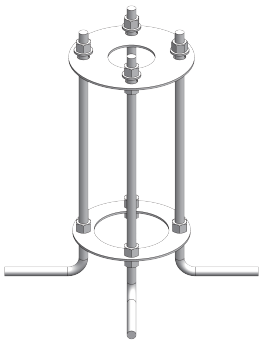

Base Dimension

Item	Lens	The manufacturer selected lens degree(°)θ1/2	Input voltage(V)	Typical operating current(mA)	Typical consumption(W)	Typical luminance(lm)	IK rate
B9BRY0126	B71	N/A	DC 24 AC 240	24V=1080 240V=120	24V=25.8 240V=25.8	2085	07

Landscape / Street pole light
B9BRY0126 @8.6W×3

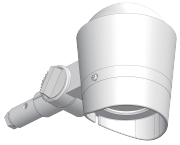

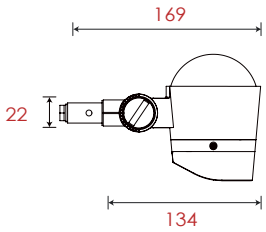

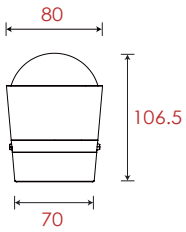

Specification

Housing	12# Die-Casting aluminum finishing or powder painting T=60-80μm.Adhesion of ISO class 1/ASTM class 4B
Light Window	Tempered Glass.T=3mm
Cable Gland	IP68 PG-9 PA66
Gasket	Tooling shaped seal
Led	NICHIA
Operating Restrict	Temperature of water between -20˚C~40˚C
Led Driver	Constant Voltage Input, Constant Current Output
Power Cable	Outside of luminaire 12V/24V: H05RN-F 2×1.0mm², L=0.3m 120V/240V: H05RN-F 3×1.0mm², L=0.3m
Dimming Support	TRIAC PWM Available 1-10V Dali Customized

Painting Color

Basic

Sanded Grey
KAL 7042

Secondary

Sanded Black
RAL 9005

Lens

Item Code		Referenced Degree(°)θ1/2			
	B71	**15°**	**24°**	**45°**	**60°**

Item	Light Source	Lens	The manufacturer selected lens degree(°)θ1/2	Input voltage(V)	Typical operating current(mA)	Typical consumption(W)	Typical luminance(lm)	IK rate
B9BRY0126	7W	B71	24°	DC 24 AC 240	24V=360 240V=40	24V=8.6 240V=8.6	695	07

Photometric

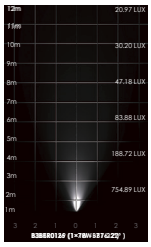

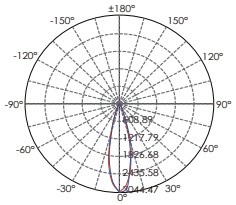

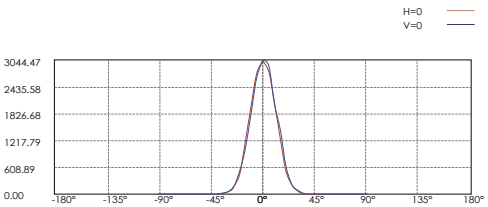

Lux distance Curve

Illuminance at a Distance

	Center Beam LUX	Beam Width V	Beam Width H
2m	754.89 LUX	0.9m	0.9m
4m	188.72 LUX	1.9m	1.9m
6m	83.88 LUX	2.8m	2.8m
8m	47.18 LUX	3.7m	3.7m
10m	30.20 LUX	4.7m	4.7m
12m	20.97 LUX	5.6m	5.6m

Vert.Spread:26.2 Horiz.Spread:26.3

Landscape / Street pole light
B9BSY0169 @20W×3

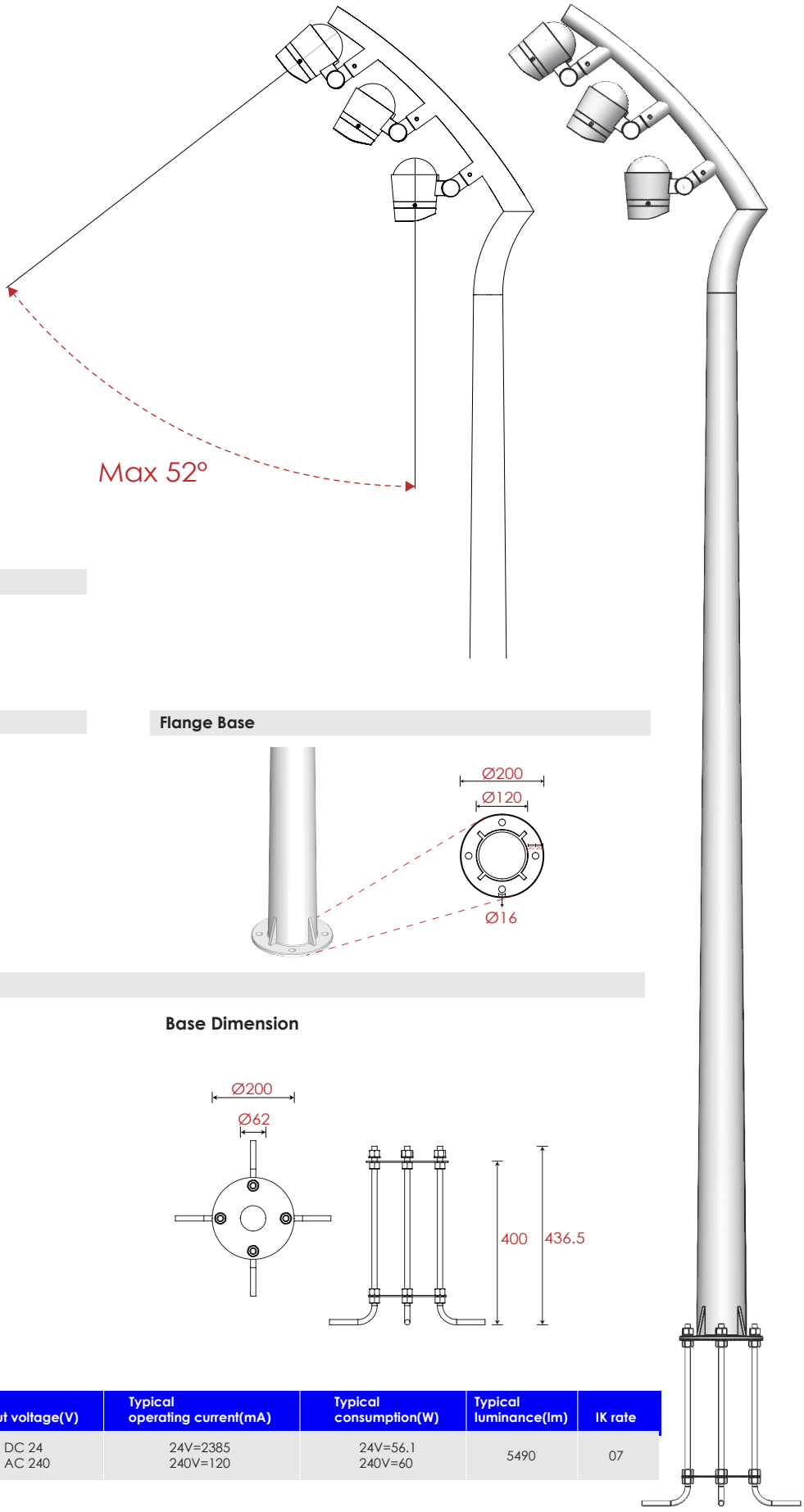

Pole Dimension & Material

Diameter : Ø120mm (Max)
Height : 3200mm (Customizeable)
Material : Iron

Painting Color

Basic
Sanded Grey
KAL 7042

Secondary
Sanded Black
RAL 9005

Flange Base

Accessories

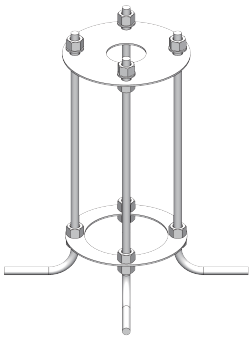

Base Dimension

Item	Lens	The manufacturer selected lens degree(°)θ1/2	Input voltage(V)	Typical operating current(mA)	Typical consumption(W)	Typical luminance(lm)	IK rate
B9BSY0169	B76	N/A	DC 24 AC 240	24V=2385 240V=120	24V=56.1 240V=60	5490	07

Landscape / Street pole light
B9BSY0169 @20W×3

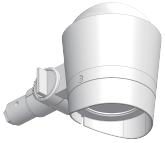

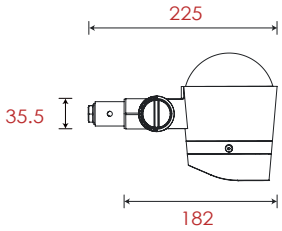

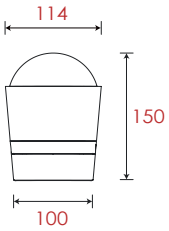

Specification

Housing	12# Die-Casting aluminum finishing or powder painting T=60-80μm.Adhesion of ISO class 1/ASTM class 4B
Light Window	Tempered Glass.T=3mm
Cable Gland	IP68 PG-9 PA66
Gasket	Tooling shaped seal
Led	NICHIA

Operating Restrict	Temperature of water between -20˚C~40˚C
Led Driver	Constant Voltage Input, Constant Current Output
Power Cable	Outside of luminaire 12V/24V: H05RN-F 2×1.0mm², L=0.3m 120V/240V: H05RN-F 3×1.0mm², L=0.3m
Dimming Support	TRIAC PWM Available 1-10V Dali Customized

Painting Color

Basic

Sanded Grey
KAL 7042

Secondary

Sanded Black
RAL 9005

Lens

Item Code		Referenced Degree(°)θ1/2			
	B76	**15°**	**20°**	**35°**	**50°**

Item	Light Source	Lens	The manufacturer selected lens degree(°)θ1/2	Input voltage(V)	Typical operating current(mA)	Typical consumption(W)	Typical luminance(lm)	IK rate
B9BSY0169	18W	B76	20°	DC 24 AC 240	24V=795 240V=40	24V=18.7 240V=20	1830	07

Photometric

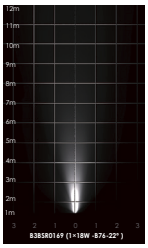

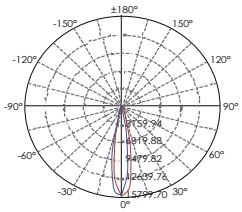

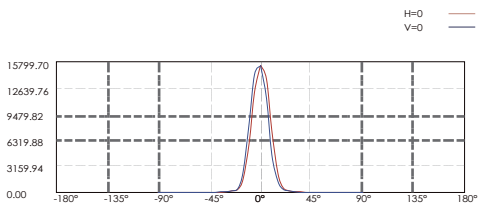

Lux distance Curve

Illuminance at a Distance

	Center Beam LUX	Beam Width V	Beam Width H
2m	3882.43 LUX	0.7m	0.6m
4m	970.61 LUX	1.3m	1.3m
6m	431.38 LUX	2.0m	1.9m
8m	242.65 LUX	2.6m	2.6m
10m	155.30 LUX	3.3m	3.2m
12m	107.85 LUX	3.9m	3.9m

Vert.Spread:18.5 Horiz.Spread:5.3

Landscape / Street pole light
B9BTY0173 @30W×3

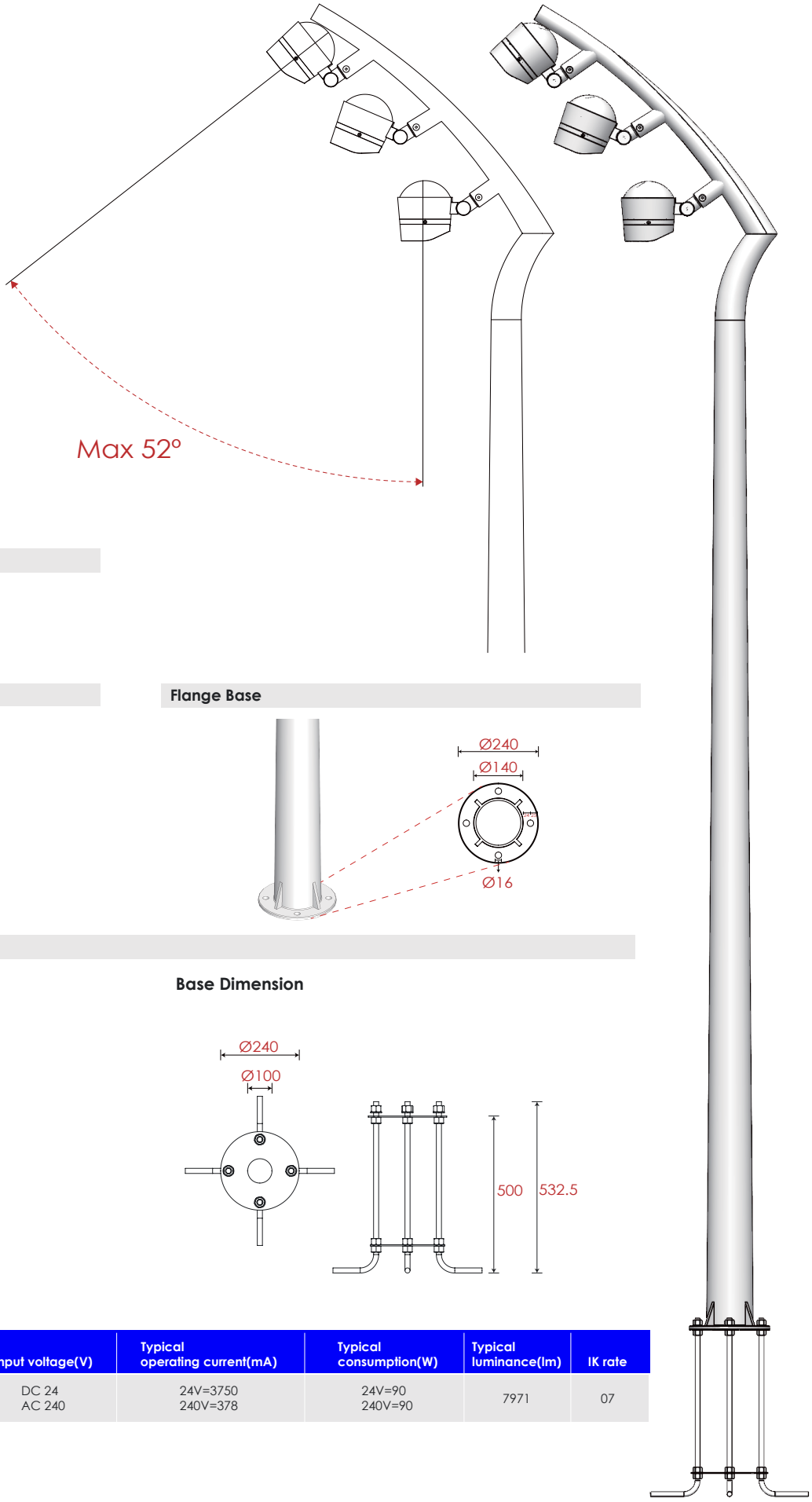

Pole Dimension & Material

Diameter : Ø140mm (Max)
Height : 4000mm (Customizeable)
Material : Iron

Painting Color

Basic
Sanded Grey
KAL 7042

Secondary
Sanded Black
RAL 9005

Flange Base

Accessories

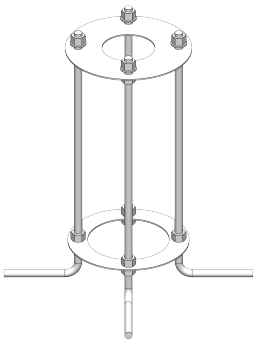

Base Dimension

Item	Lens	The manufacturer selected lens degree(°)θ1/2	Input voltage(V)	Typical operating current(mA)	Typical consumption(W)	Typical luminance(lm)	IK rate
B9BTY0173	B57	N/A	DC 24 AC 240	24V=3750 240V=378	24V=90 240V=90	7971	07

Landscape / Street pole light
B9BTY0173 @30W×3

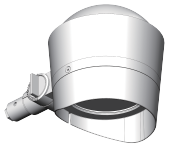

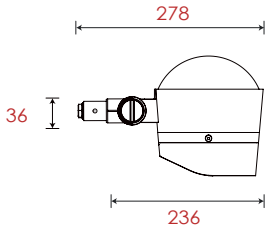

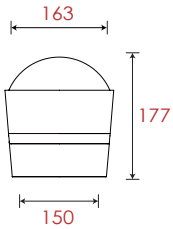

Specification

Housing	12# Die-Casting aluminum finishing or powder painting T=60-80μm.Adhesion of ISO class 1/ASTM class 4B
Light Window	Tempered Glass.T=3mm
Cable Gland	IP68 PG-9 PA66
Gasket	Tooling shaped seal
Led	NICHIA

Operating Restrict	Temperature of water between -20˚C~40˚C
Led Driver	Constant Voltage Input, Constant Current Output
Power Cable	Outside of luminaire 12V/24V: H05RN-F 2×1.0mm², L=0.3m 120V/240V: H05RN-F 3×1.0mm², L=0.3m
Dimming Support	TRIAC PWM Available 1-10V Dali Customized

Painting Color

Basic

Sanded Grey
KAL 7042

Secondary

Sanded Black
RAL 9005

Lens

Item Code		Referenced Degree(°)θ1/2			
	B57	**15°**	**25°**	**36°**	**60°**

Item	Light Source	Lens	The manufacturer selected lens degree(°)θ1/2	Input voltage(V)	Typical operating current(mA)	Typical consumption(W)	Typical luminance(lm)	IK rate
B9BTY0173	27W	B57	25°	DC 24 AC 240	24V=1250 240V=126	24V=30 240V=30	2657	07

Photometric

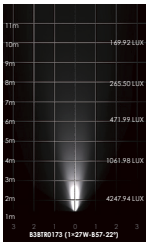

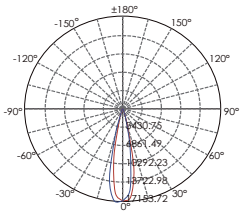

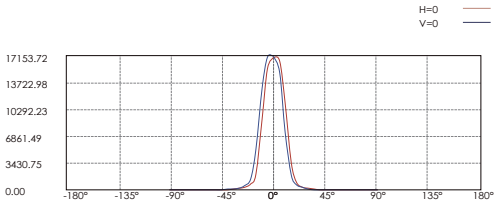

Lux distance Curve

Illuminance at a Distance

	Center Beam LUX	Beam Width V	Beam Width H
2m	4247.94 LUX	0.8m	0.8m
4m	1061.98 LUX	1.6m	1.6m
6m	471.99 LUX	2.3m	2.3m
8m	265.50 LUX	3.1m	3.1m
10m	169.92 LUX	3.9m	3.9m
12m	118.00 LUX	4.7m	4.7m

Vert.Spread:22.1 Horiz.Spread:22.1

Landscape / Street pole light
B9BRC0126 @8.6W

Adjustable Beam Direction

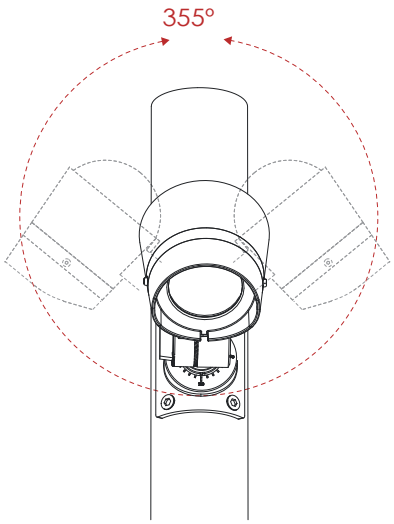

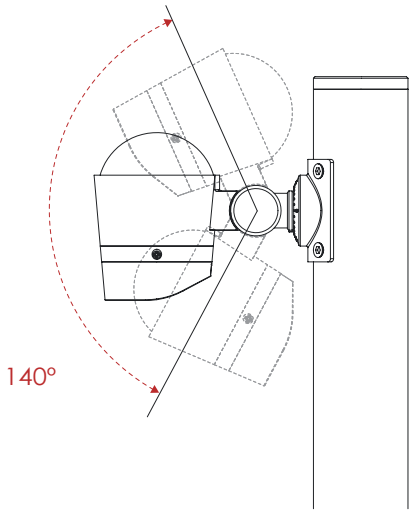

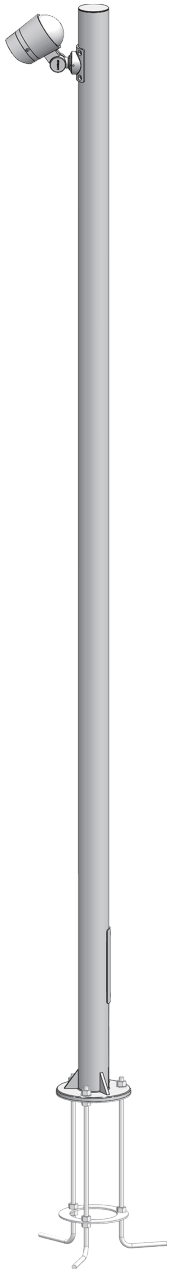

Regular Painting Color

Basic

Sanded Grey
KAL 7042

Secondary

Sanded Black
RAL 9005

Flag Base

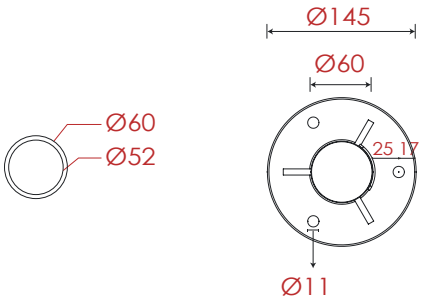

Pole Dimension

Diameter : Ø60mm
Height : 2200mm (Customizeable)
Material : Aluminum

Accessories

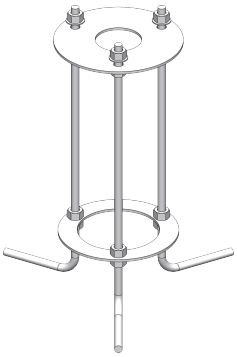

Base Dimension

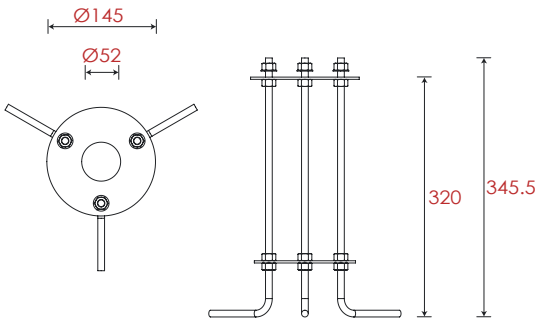

Item	Lens	The manufacturer selected lens degree(°)θ1/2	Input voltage(V)	Typical operating current(mA)	Typical consumption(W)	Typical luminance(lm)	IK rate
B9BRC0126	B71	24°	120 / 240	120V=71 240V=40	8.6	695	07

1

Landscape / Street pole light
B9BRC0126 @8.6W

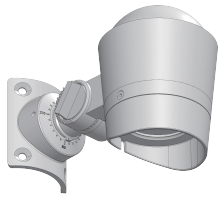

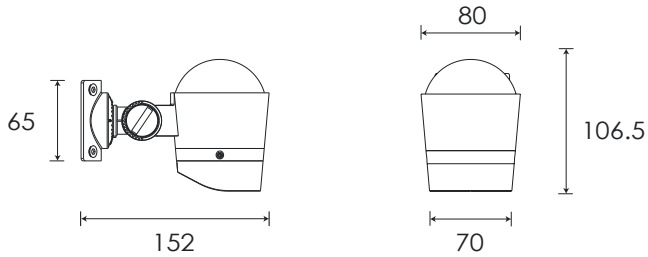

Specification

Housing	12# Die-Casting aluminum finishing or powder painting T=60-80μm.Adhesion of ISO class 1/ASTM class 4B
Light Window	Tempered Glass.T=3mm
Cable Gland	IP68 PG-9 PA66
Gasket	Tooling shaped seal
LED	NICHIA
LED Driver	Constant Voltage Input, Constant Current Output
Power Cable	Outside of luminaire 120V/240V: H05RN-F 3×1.0mm², L=3m
Dimming Support	TRIAC PWM Available 1-10V Dali Customized
Operating Restrict	Temperature of water between -20˚C~40˚C

Regular Painting Color

Basic

Sanded Grey
KAL 7042

Secondary

Sanded Black
RAL 9005

Lens

Item Code		Referenced Degree(°)θ1/2			
	B71	**15°**	**24°**	**45°**	**60°**

Item	Light Source	Lens	The manufacturer selected lens degree(°)θ1/2	Input voltage(V)	Typical operating current(mA)	Typical consumption(W)	Typical luminance(lm)	IK rate
B9BRR0126	7W	B71	24°	120 / 240	120V=71 240V=40	8.6	695	07

Photometric

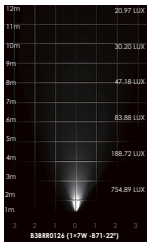

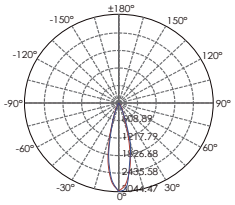

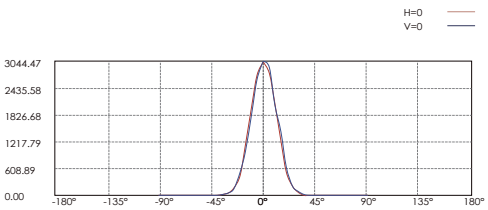

Lux distance Curve

Illuminance at a Distance

	Center Beam LUX	Beam Width V	Beam Width H
2m	754.89 LUX	0.9m	0.9m
4m	188.72 LUX	1.9m	1.9m
6m	83.88 LUX	2.8m	2.8m
8m	47.18 LUX	3.7m	3.7m
10m	30.20 LUX	4.7m	4.7m
12m	20.97 LUX	5.6m	5.6m

Vert.Spread:26.2 Horiz.Spread:26.3

Landscape / Street pole light
B9BRC0226 @8.6W×2

Adjustable Beam Direction

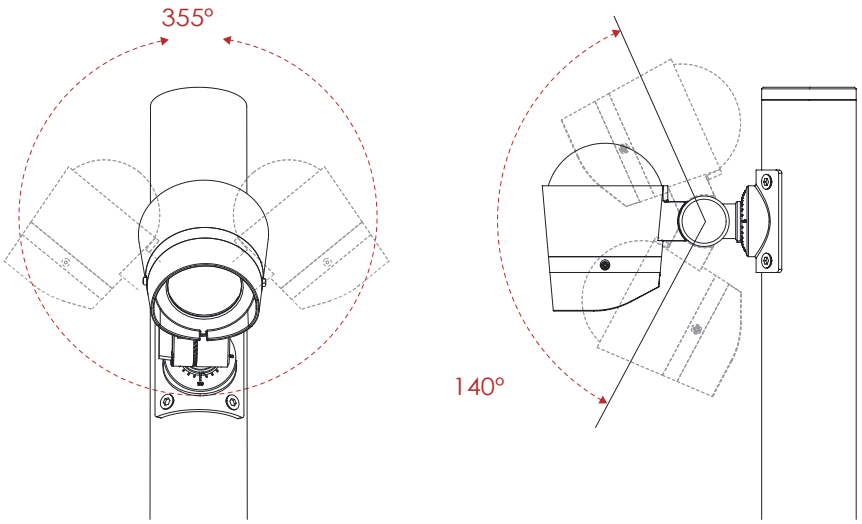

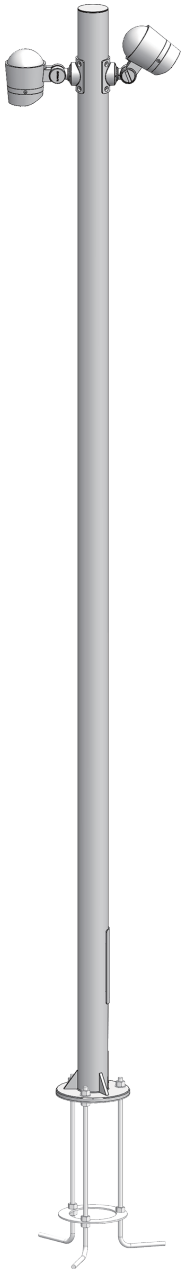

Regular Painting Color

Basic	Secondary
Sanded Grey **KAL 7042**	Sanded Black **RAL 9005**

Flag Base

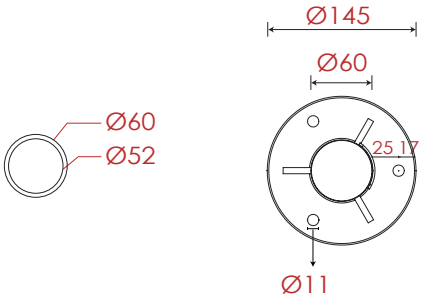

Pole Dimension

Diameter : Ø60mm
Height : 2200mm (Customizeable)
Material : Aluminum

Accessories

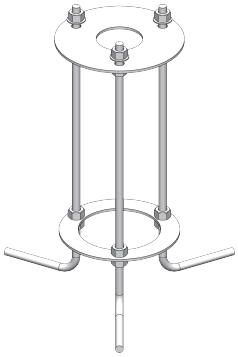

Base Dimension

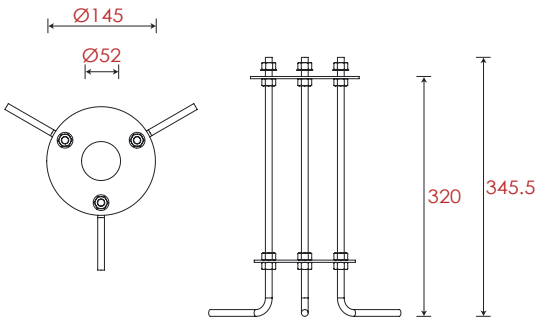

Item	Lens	The manufacturer selected lens degree(°)θ1/2	Input voltage(V)	Typical operating current(mA)	Typical consumption(W)	Typical luminance(lm)	IK rate
B9BRC0226	B71	24°	120 / 240	120V=71 × 2 240V=40 × 2	8.6 × 2	695 × 2	07

Landscape / Street pole light
B9BRC0226 @8.6W×2

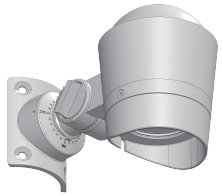

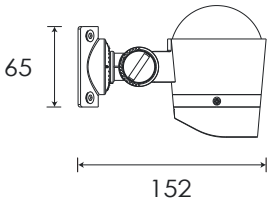

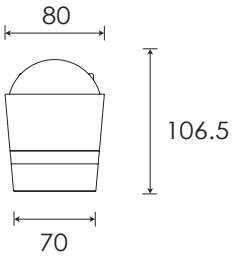

Specification

Housing	12# Die-Casting aluminum finishing or powder painting T=60-80μm.Adhesion of ISO class 1/ASTM class 4B
Light Window	Tempered Glass.T=3mm
Cable Gland	IP68 PG-9 PA66
Gasket	Tooling shaped seal
LED	NICHIA
LED Driver	Constant Voltage Input, Constant Current Output
Power Cable	Outside of luminaire 120V/240V: H05RN-F 3×1.0mm², L=3m
Dimming Support	TRIAC PWM Available 1-10V Dali Customized
Operating Restrict	Temperature of water between -20˚C~40˚C

Regular Painting Color

Basic

Sanded Grey
KAL 7042

Secondary

Sanded Black
RAL 9005

Lens

Item Code		Referenced Degree(°)θ1/2			
	B71	**15°**	**24°**	**45°**	**60°**

Item	Light Source	Lens	The manufacturer selected lens degree(°)θ1/2	Input voltage(V)	Typical operating current(mA)	Typical consumption(W)	Typical luminance(lm)	IK rate
B9BRR0126	7W	B71	24°	120 / 240	120V=71 240V=40	8.6	695	07

Photometric

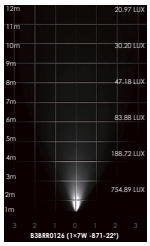

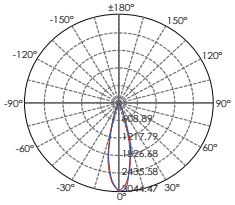

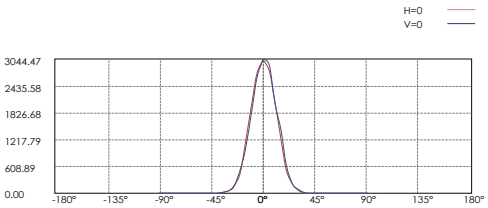

Lux distance Curve

Illuminance at a Distance

	Center Beam LUX	Beam Width V	Beam Width H
2m	754.89 LUX	0.9m	0.9m
4m	188.72 LUX	1.9m	1.9m
6m	83.88 LUX	2.8m	2.8m
8m	47.18 LUX	3.7m	3.7m
10m	30.20 LUX	4.7m	4.7m
12m	20.97 LUX	5.6m	5.6m

Vert.Spread:26.2 Horiz.Spread:26.3

Landscape / Street pole light
B9BRC0326 @8.6W×3

Adjustable Beam Direction

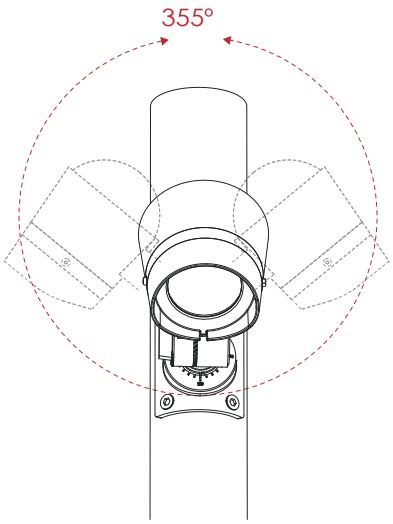

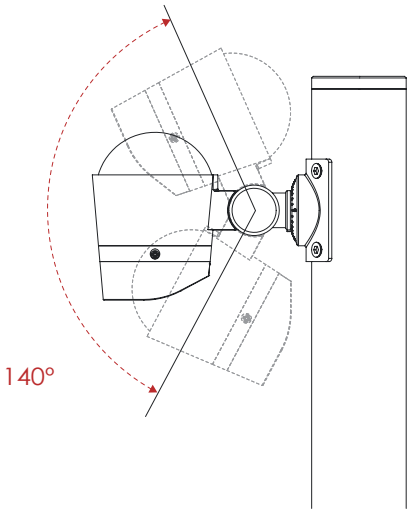

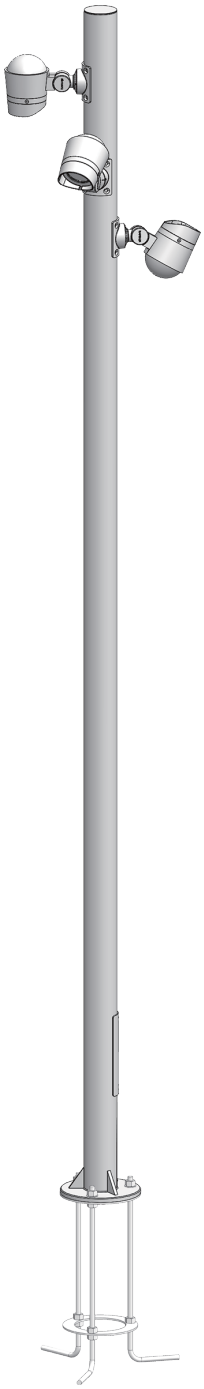

Regular Painting Color

Basic	Secondary
Sanded Grey **KAL 7042**	Sanded Black **RAL 9005**

Flag Base

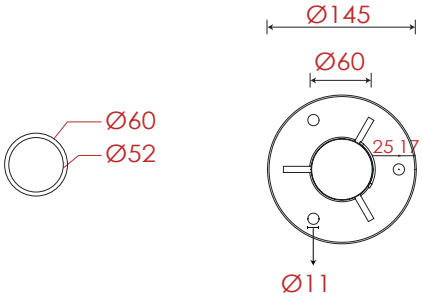

Pole Dimension

Diameter : Ø60mm
Height : 2200mm (Customizeable)
Material : Aluminum

Accessories

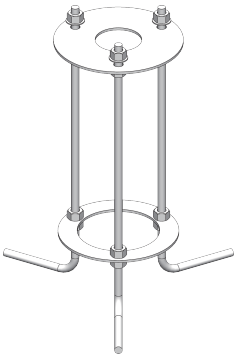

Base Dimension

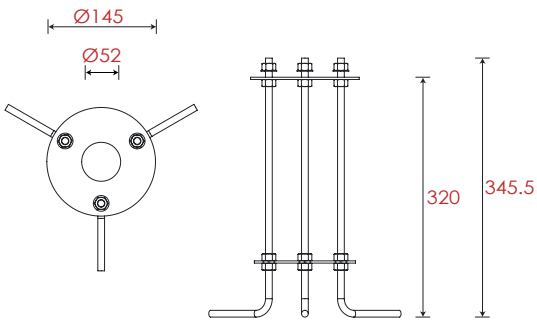

Item	Lens	The manufacturer selected lens degree(°)θ1/2	Input voltage(V)	Typical operating current(mA)	Typical consumption(W)	Typical luminance(lm)	IK rate
B9BRC0326	B71	24°	120 / 240	120V=71 × 3 240V=40 × 3	8.6 × 3	695 × 3	07

Landscape / Street pole light
B9BRC0326 @8.6W×3

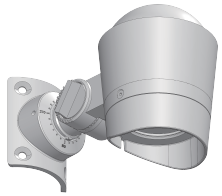

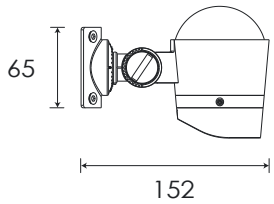

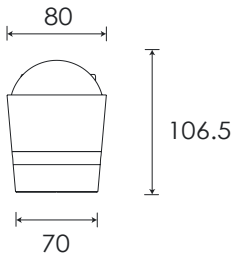

Specification

Housing	12# Die-Casting aluminum finishing or powder painting T=60-80μm.Adhesion of ISO class 1/ASTM class 4B
Light Window	Tempered Glass.T=3mm
Cable Gland	IP68 PG-9 PA66
Gasket	Tooling shaped seal
LED	NICHIA
LED Driver	Constant Voltage Input, Constant Current Output
Power Cable	Outside of luminaire 120V/240V: H05RN-F 3×1.0mm², L=3m
Dimming Support	TRIAC PWM Available 1-10V Dali Customized
Operating Restrict	Temperature of water between -20˚C~40˚C

Regular Painting Color

Basic

Sanded Grey
KAL 7042

Secondary

Sanded Black
RAL 9005

Lens

Item Code		Referenced Degree(°)θ1/2			
	B71	**15°**	**24°**	**45°**	**60°**

Item	Light Source	Lens	The manufacturer selected lens degree(°)θ1/2	Input voltage(V)	Typical operating current(mA)	Typical consumption(W)	Typical luminance(lm)	IK rate
B9BRR0126	7W	B71	24°	120 / 240	120V=71 240V=40	8.6	695	07

Photometric

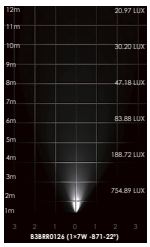

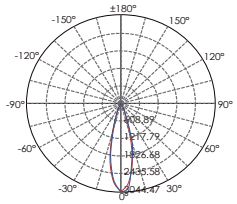

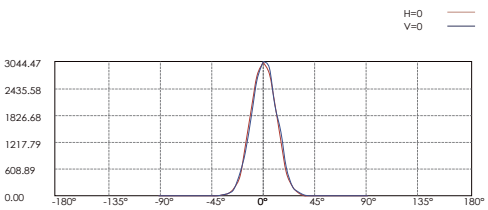

Lux distance Curve

Illuminance at a Distance

	Center Beam LUX	Beam Width V	Beam Width H
2m	754.89 LUX	0.9m	0.9m
4m	188.72 LUX	1.9m	1.9m
6m	83.88 LUX	2.8m	2.8m
8m	47.18 LUX	3.7m	3.7m
10m	30.20 LUX	4.7m	4.7m
12m	20.97 LUX	5.6m	5.6m

Vert.Spread:26.2 Horiz.Spread:26.3

Landscape / Street pole light
B9BRC0526 @8.6W×5

Adjustable Beam Direction

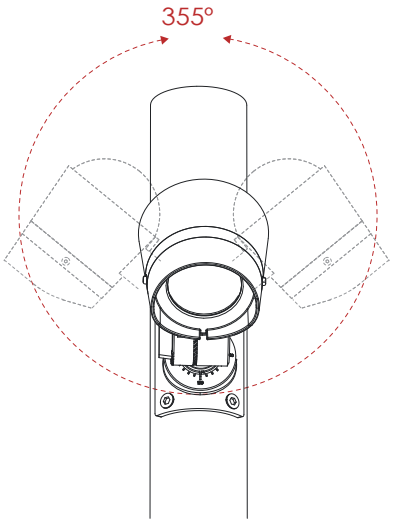

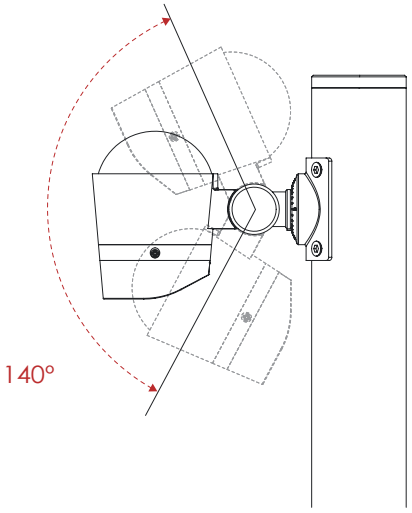

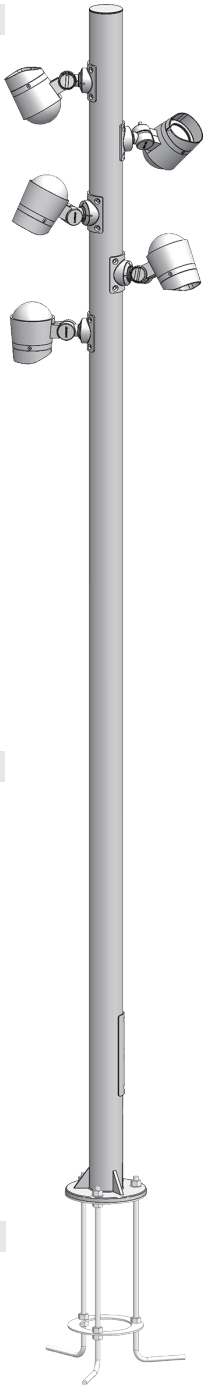

Regular Painting Color

Basic
Sanded Grey
KAL 7042

Secondary
Sanded Black
RAL 9005

Flag Base

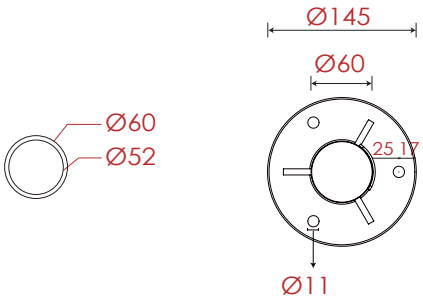

Pole Dimension

Diameter : Ø60mm
Height : 2200mm (Customizeable)
Material : Aluminum

Accessories

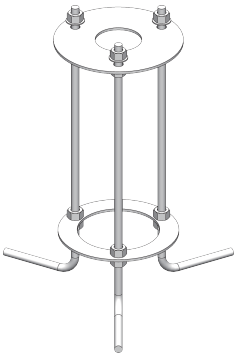

Base Dimension

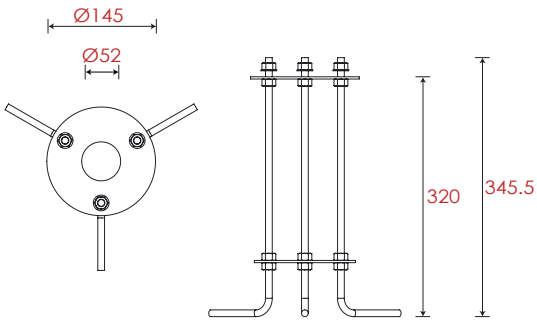

Item	Lens	The manufacturer selected lens degree(°)θ1/2	Input voltage(V)	Typical operating current(mA)	Typical consumption(W)	Typical luminance(lm)	IK rate
B9BRC0526	B71	24°	120 / 240	120V=71 × 5 240V=40 × 5	8.6 × 5	695 × 5	07

Landscape / Street pole light
B9BRC0526 @8.6W×5

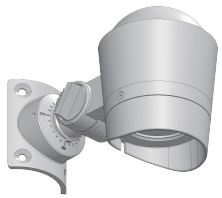

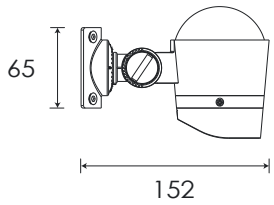

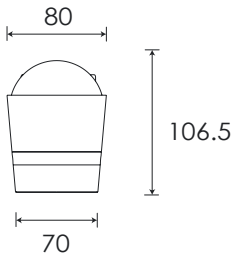

Specification

Housing	12# Die-Casting aluminum finishing or powder painting T=60-80μm.Adhesion of ISO class 1/ASTM class 4B
Light Window	Tempered Glass.T=3mm
Cable Gland	IP68 PG-9 PA66
Gasket	Tooling shaped seal
LED	NICHIA
LED Driver	Constant Voltage Input, Constant Current Output
Power Cable	Outside of luminaire 120V/240V: H05RN-F 3×1.0mm², L=3m
Dimming Support	TRIAC PWM Available 1-10V Dali Customized
Operating Restrict	Temperature of water between -20˚C~40˚C

Regular Painting Color

Basic

Sanded Grey
KAL 7042

Secondary

Sanded Black
RAL 9005

Lens

Item Code		Referenced Degree(°)θ1/2			
	B71	**15°**	**24°**	**45°**	**60°**

Item	Light Source	Lens	The manufacturer selected lens degree(°)θ1/2	Input voltage(V)	Typical operating current(mA)	Typical consumption(W)	Typical luminance(lm)	IK rate
B9BRR0126	7W	B71	24°	120 / 240	120V=71 240V=40	8.6	695	07

Photometric

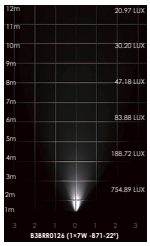

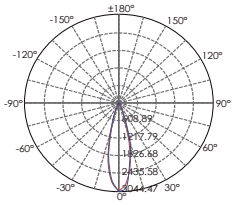

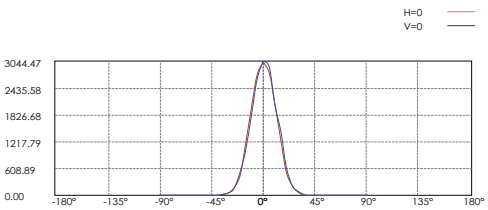

Lux distance Curve

Illuminance at a Distance

	Center Beam LUX	Beam Width V	Beam Width H
2m	754.89 LUX	0.9m	0.9m
4m	188.72 LUX	1.9m	1.9m
6m	83.88 LUX	2.8m	2.8m
8m	47.18 LUX	3.7m	3.7m
10m	30.20 LUX	4.7m	4.7m
12m	20.97 LUX	5.6m	5.6m

Vert.Spread:26.2 Horiz.Spread:26.3

Landscape / Street pole light
B9BSC0169 @20W

Adjustable Beam Direction

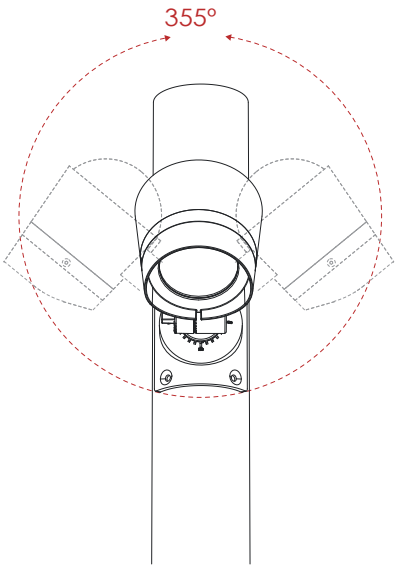

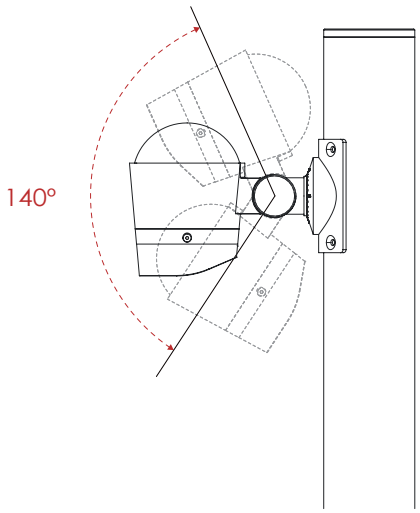

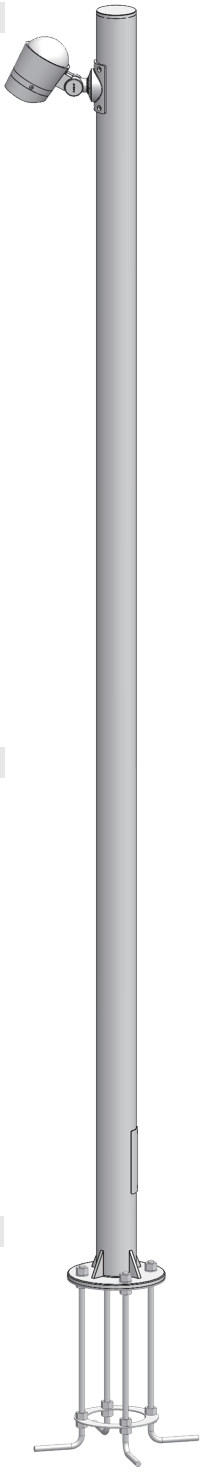

Regular Painting Color

Basic	Secondary
Sanded Grey **KAL 7042**	Sanded Black **RAL 9005**

Flag Base

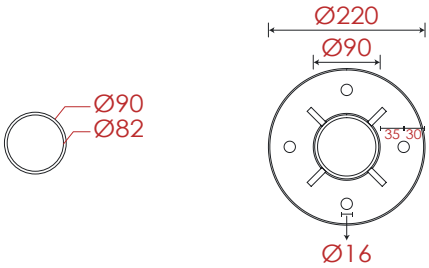

Pole Dimension & Material

Diameter : Ø90mm
Height : 3000mm (Customizeable)
Material : Aluminum

Accessories

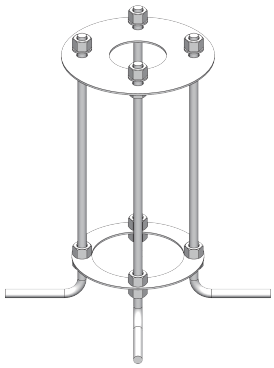

Base Dimension

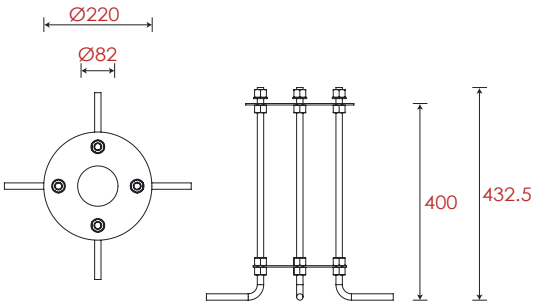

Item	Lens	The manufacturer selected lens degree(°)θ1/2	Input voltage(V)	Typical operating current(mA)	Typical consumption(W)	Typical luminance(lm)	IK rate
B9BSC0169	B76	20°	240	240V=40	20	1830	07

Landscape / Street pole light
B9BSR0169

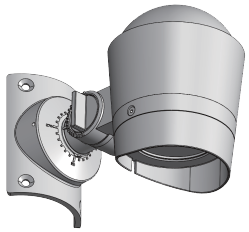

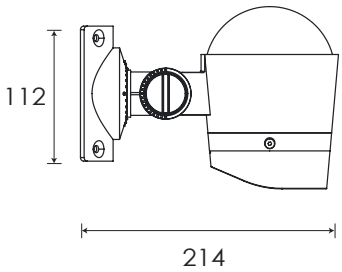

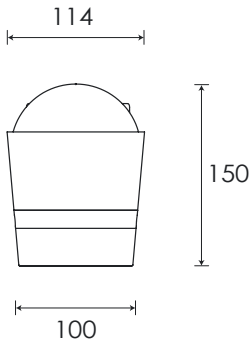

Specification

Housing	12# Die-Casting aluminum finishing or powder painting T=60-80μm.Adhesion of ISO class 1/ASTM class 4B
Light Window	Tempered Glass.T=3mm
Cable Gland	IP68 PG-9 PA66
Gasket	Tooling shaped seal
LED	NICHIA

LED Driver	Constant Voltage Input, Constant Current Output
Power Cable	Outside of luminaire 120V/240V: H05RN-F 3×1.0mm², L=4m
Dimming Support	TRIAC PWM Available 1-10V Dali Customized
Operating Restrict	Temperature of environment between -20˚C~40˚C

Regular Painting Color

Basic

Sanded Grey
KAL 7042

Secondary

Sanded Black
RAL 9005

Lens

Item Code		Referenced Degree(°)θ1/2			
	B76	**15°**	**20°**	**35°**	**50°**

Item	Light Source	Lens	The manufacturer selected lens degree(°)θ1/2	Input voltage(V)	Typical operating current(mA)	Typical consumption(W)	Typical luminance(lm)	IK rate
B9BSR0169	18W	B76	20°	240	240V=40	20	1830	07

Photometric

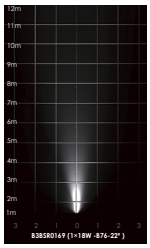

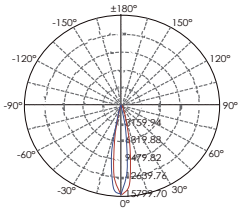

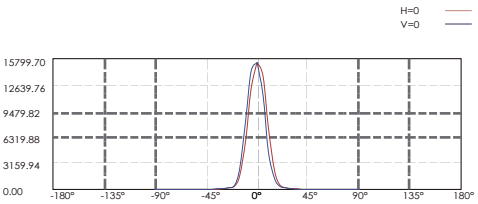

Lux distance Curve

Illuminance at a Distance

	Center Beam LUX	Beam Width V	Beam Width H
2m	3882.43 LUX	0.7m	0.6m
4m	970.61 LUX	1.3m	1.3m
6m	431.38 LUX	2.0m	1.9m
8m	242.65 LUX	2.6m	2.6m
10m	155.30 LUX	3.3m	3.2m
12m	107.85 LUX	3.9m	3.9m

Vert.Spread:18.5 Horiz.Spread:18.3

Landscape / Street pole light
B9BSC0269 @20wX2

Adjustable Beam Direction

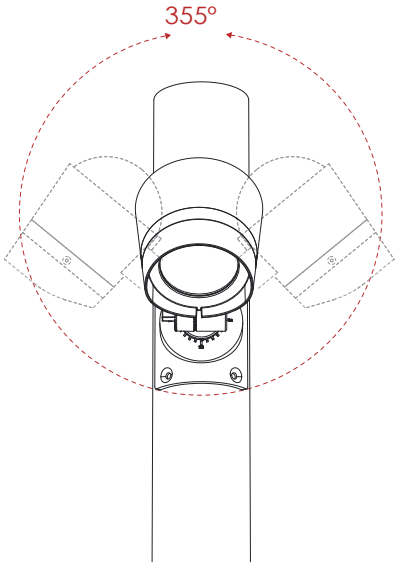

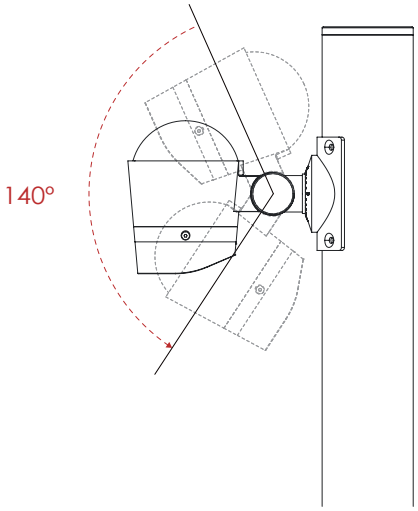

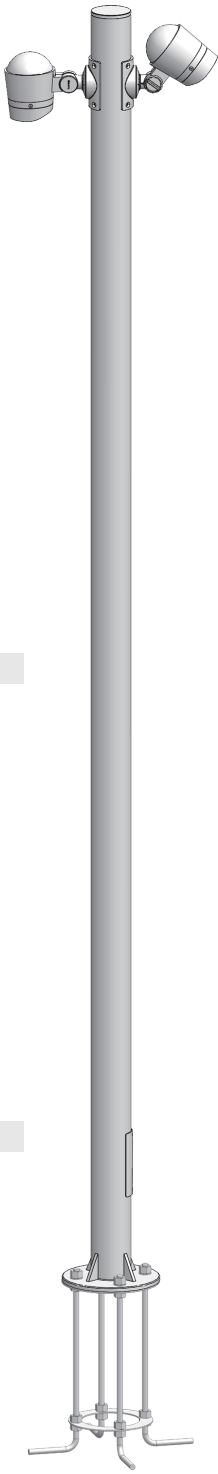

Regular Painting Color

Basic

Sanded Grey
KAL 7042

Secondary

Sanded Black
RAL 9005

Flag Base

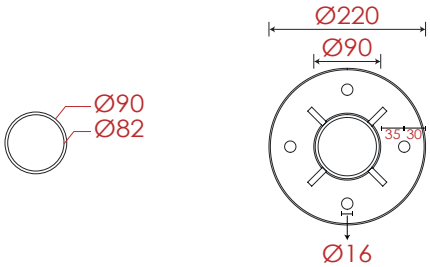

Pole Dimension & Material

Diameter : Ø90mm
Height : 3000mm (Customizeable)
Material : Aluminum

Accessories

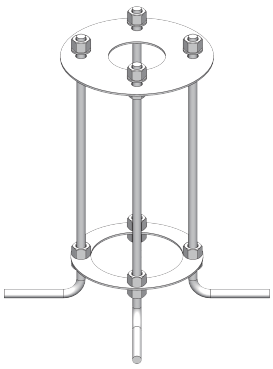

Base Dimension

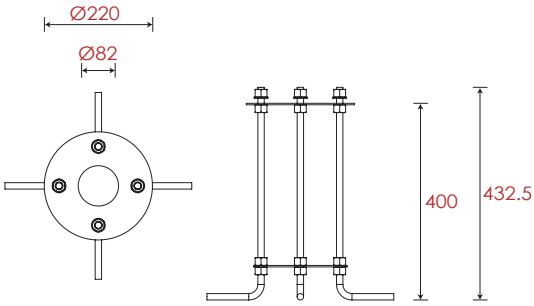

Item	Lens	The manufacturer selected lens degree(°)θ1/2	Input voltage(V)	Typical operating current(mA)	Typical consumption(W)	Typical luminance(lm)	IK rate
B9BSC0269	B76	20°	240	240V=40 × 2	20 × 2	1830 × 2	07

Landscape / Street pole light
B9BSR0169

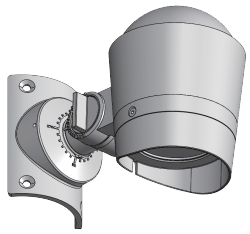

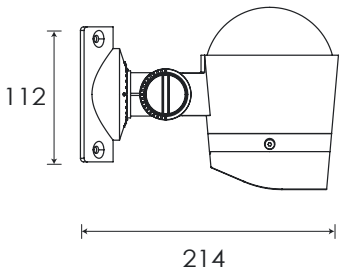

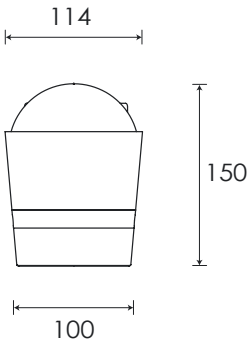

Specification

Housing	12# Die-Casting aluminum finishing or powder painting T=60-80μm.Adhesion of ISO class 1/ASTM class 4B
Light Window	Tempered Glass.T=3mm
Cable Gland	IP68 PG-9 PA66
Gasket	Tooling shaped seal
LED	NICHIA

LED Driver	Constant Voltage Input, Constant Current Output
Power Cable	Outside of luminaire 120V/240V: H05RN-F 3×1.0mm², L=4m
Dimming Support	TRIAC PWM Available 1-10V Dali Customized
Operating Restrict	Temperature of environment between -20˚C~40˚C

Regular Painting Color

Basic

Sanded Grey
KAL 7042

Secondary

Sanded Black
RAL 9005

Lens

Item Code		Referenced Degree(°)θ1/2			
	B76	**15°**	**20°**	**35°**	**50°**

Item	Light Source	Lens	The manufacturer selected lens degree(°)θ1/2	Input voltage(V)	Typical operating current(mA)	Typical consumption(W)	Typical luminance(lm)	IK rate
B9BSR0169	18W	B76	20°	240	240V=40	20	1830	07

Photometric

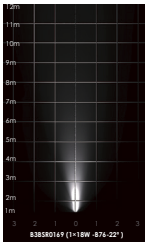

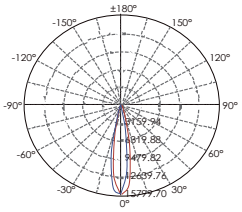

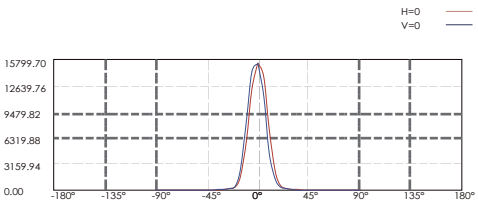

Lux distance Curve

Illuminance at a Distance

	Center Beam LUX	Beam Width V	Beam Width H
2m	3882.43 LUX	0.7m	0.6m
4m	970.61 LUX	1.3m	1.3m
6m	431.38 LUX	2.0m	1.9m
8m	242.65 LUX	2.6m	2.6m
10m	155.30 LUX	3.3m	3.2m
12m	107.85 LUX	3.9m	3.9m

Vert.Spread:18.5 Horiz.Spread:18.3

Landscape / Street pole light
B9BSR0169

Adjustable Beam Direction

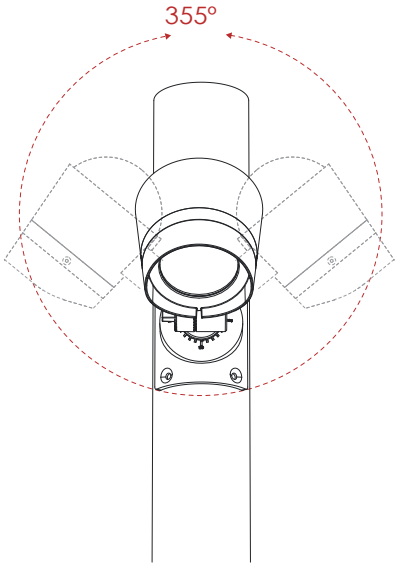

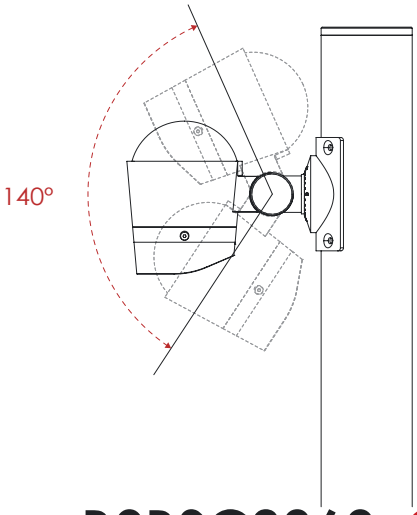

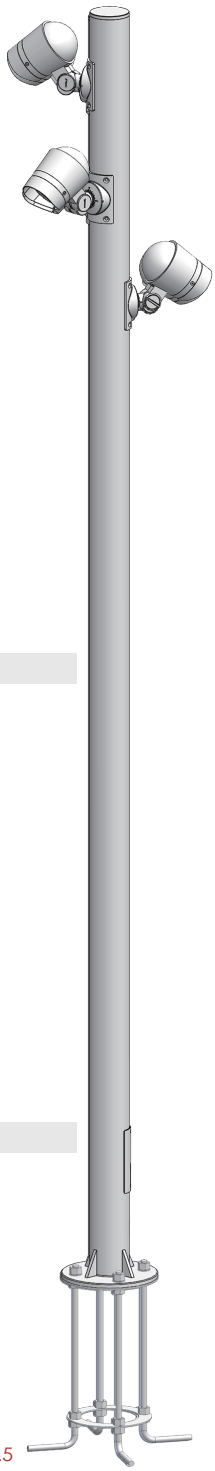

B9BSC0369 @20W×3

Regular Painting Color

Basic
Sanded Grey
KAL 7042

Secondary
Sanded Black
RAL 9005

Flag Base

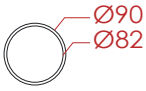

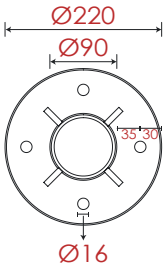

Pole Dimension & Material

Diameter : Ø90mm
Height : 3000mm (Customizeable)
Material : Aluminum

Accessories

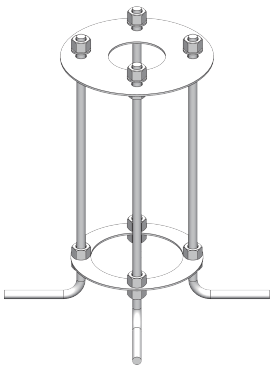

Base Dimension

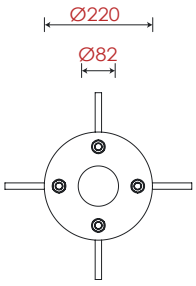

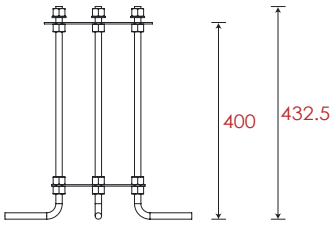

Item	Lens	The manufacturer selected lens degree(°)θ1/2	Input voltage(V)	Typical operating current(mA)	Typical consumption(W)	Typical luminance(lm)	IK rate
B9BSC0369	B76	20°	240	240V=40 × 3	20 × 3	1830 × 3	07

Landscape / Street pole light
B9BSR0169

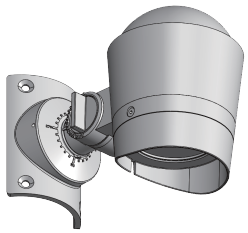

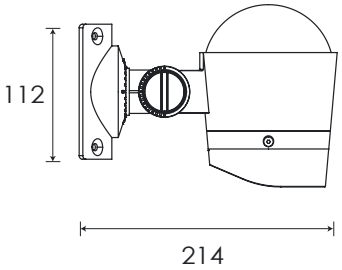

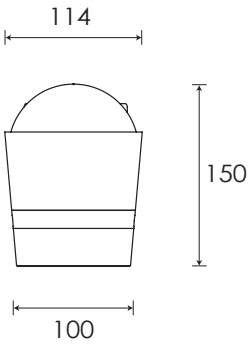

Specification

Housing	12# Die-Casting aluminum finishing or powder painting T=60-80μm.Adhesion of ISO class 1/ASTM class 4B
Light Window	Tempered Glass.T=3mm
Cable Gland	IP68 PG-9 PA66
Gasket	Tooling shaped seal
LED	NICHIA
LED Driver	Constant Voltage Input, Constant Current Output
Power Cable	Outside of luminaire 120V/240V: H05RN-F 3×1.0mm², L=4m
Dimming Support	TRIAC PWM Available 1-10V Dali Customized
Operating Restrict	Temperature of environment between -20˚C~40˚C

Regular Painting Color

Basic

Sanded Grey
KAL 7042

Secondary

Sanded Black
RAL 9005

Lens

Item Code		Referenced Degree(°)θ1/2			
	B76	**15°**	**20°**	**35°**	**50°**

Item	Light Source	Lens	The manufacturer selected lens degree(°)θ1/2	Input voltage(V)	Typical operating current(mA)	Typical consumption(W)	Typical luminance(lm)	IK rate
B9BSR0169	18W	B76	20°	240	240V=40	20	1830	07

Photometric

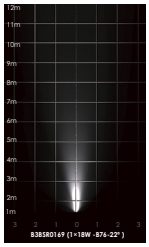

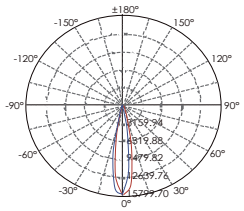

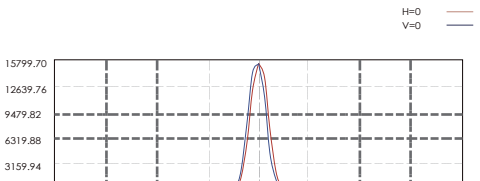

Lux distance Curve

Illuminance at a Distance

	Center Beam LUX	Beam Width V	Beam Width H
2m	3882.43 LUX	0.7m	0.6m
4m	970.61 LUX	1.3m	1.3m
6m	431.38 LUX	2.0m	1.9m
8m	242.65 LUX	2.6m	2.6m
10m	155.30 LUX	3.3m	3.2m
12m	107.85 LUX	3.9m	3.9m

Vert.Spread:18.5 Horiz.Spread:18.3

Landscape / Street pole light
B9BSC0569 @20wX5

Adjustable Beam Direction

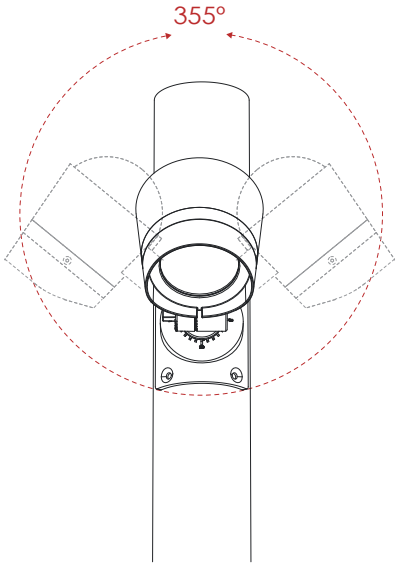

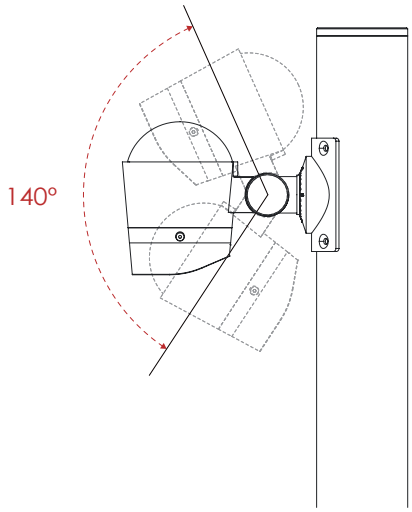

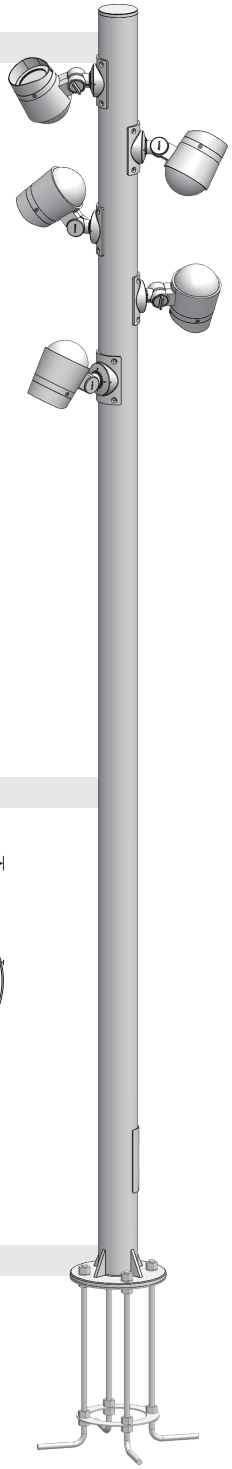

Regular Painting Color

Basic
Sanded Grey
KAL 7042

Secondary
Sanded Black
RAL 9005

Flag Base

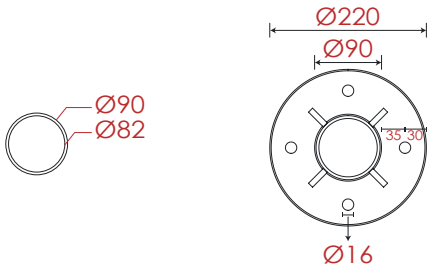

Pole Dimension & Material

Diameter : Ø90mm
Height : 3000mm (Customizeable)
Material : Aluminum

Accessories

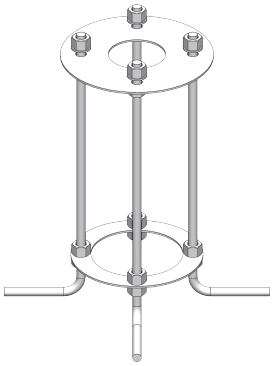

Base Dimension

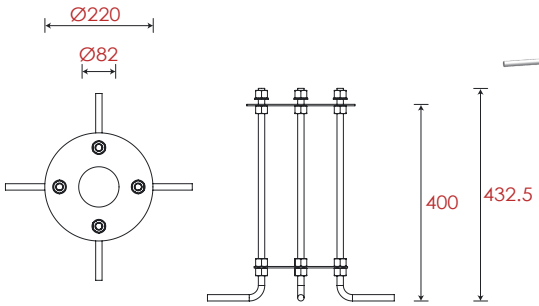

Item	Lens	The manufacturer selected lens degree(°)θ1/2	Input voltage(V)	Typical operating current(mA)	Typical consumption(W)	Typical luminance(lm)	IK rate
B9BSC0569	B76	20°	240	240V=40 × 5	20 × 5	1830 × 5	07

Landscape / Street pole light
B9BSR0169

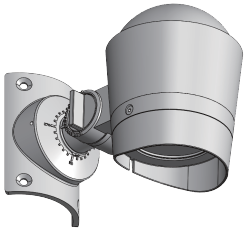

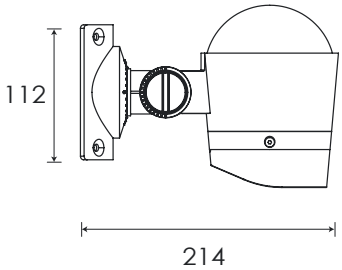

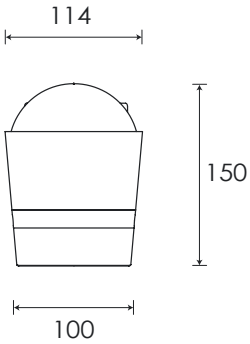

Specification

Housing	12# Die-Casting aluminum finishing or powder painting T=60-80μm.Adhesion of ISO class 1/ASTM class 4B
Light Window	Tempered Glass.T=3mm
Cable Gland	IP68 PG-9 PA66
Gasket	Tooling shaped seal
LED	NICHIA
LED Driver	Constant Voltage Input, Constant Current Output
Power Cable	Outside of luminaire 120V/240V: H05RN-F 3×1.0mm², L=4m
Dimming Support	TRIAC PWM Available 1-10V Dali Customized
Operating Restrict	Temperature of environment between -20˚C~40˚C

Regular Painting Color

Basic

Sanded Grey
KAL 7042

Secondary

Sanded Black
RAL 9005

Lens

Item Code		Referenced Degree(°)θ1/2			
	B76	**15°**	**20°**	**35°**	**50°**

Item	Light Source	Lens	The manufacturer selected lens degree(°)θ1/2	Input voltage(V)	Typical operating current(mA)	Typical consumption(W)	Typical luminance(lm)	IK rate
B9BSR0169	18W	B76	20°	240	240V=40	20	1830	07

Photometric

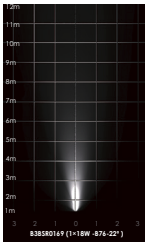

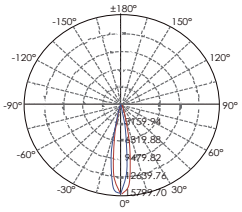

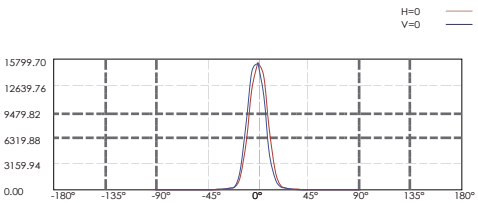

Lux distance Curve

Illuminance at a Distance

	Center Beam LUX	Beam Width V	Beam Width H
2m	3882.43 LUX	0.7m	0.6m
4m	970.61 LUX	1.3m	1.3m
6m	431.38 LUX	2.0m	1.9m
8m	242.65 LUX	2.6m	2.6m
10m	155.30 LUX	3.3m	3.2m
12m	107.85 LUX	3.9m	3.9m

Vert.Spread:18.5 Horiz.Spread:18.3

Landscape / Street pole light
B9BTC0173 @30W

Adjustable Beam Direction

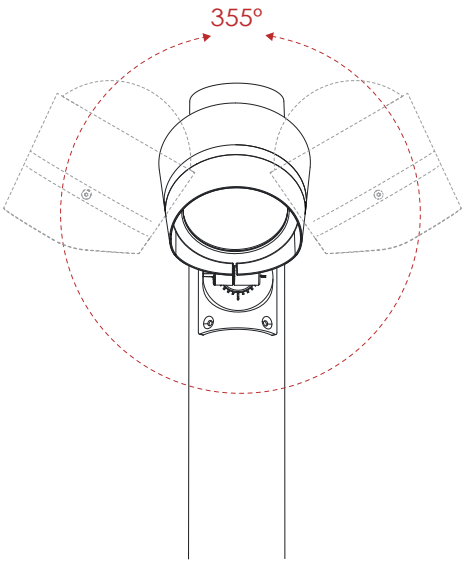

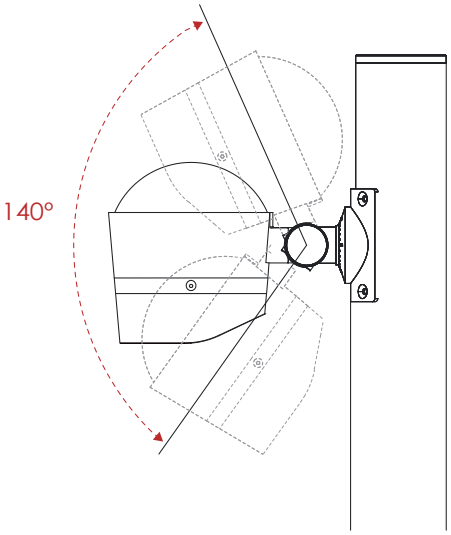

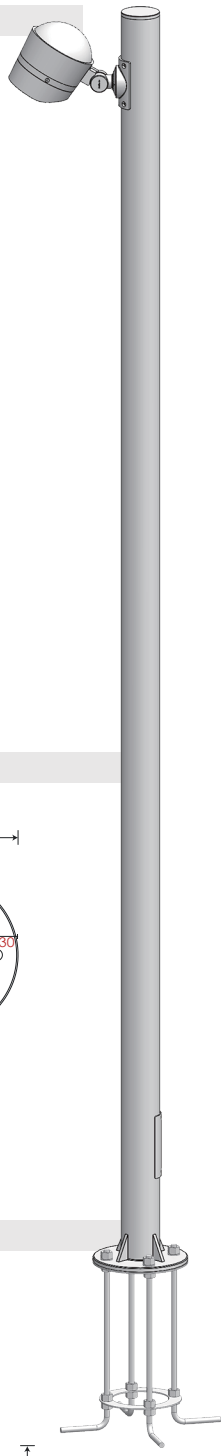

Regular Painting Color

Basic
Sanded Grey
KAL 7042

Secondary
Sanded Black
RAL 9005

Flag Base

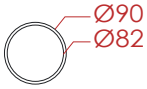

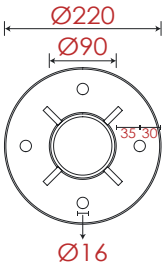

Pole Dimension & Material

Diameter : Ø90mm
Height : 3000mm (Customizeable)
Material : Aluminum

Accessories

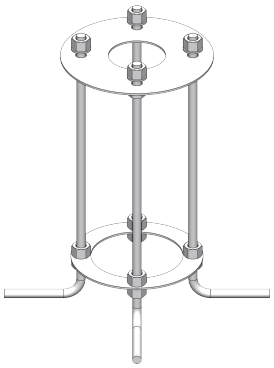

Base Dimension

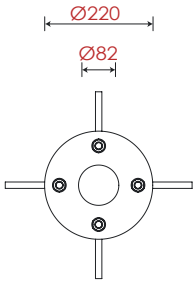

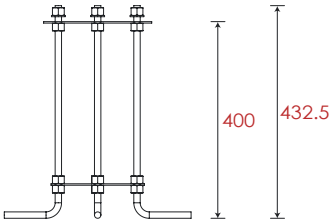

Item	Lens	The manufacturer selected lens degree(°)θ1/2	Input voltage(V)	Typical operating current(mA)	Typical consumption(W)	Typical luminance(lm)	IK rate
B9BTC0173	B57	25°	240	240V=126	30	2657	07

Landscape / Street pole light
B9BTC0173

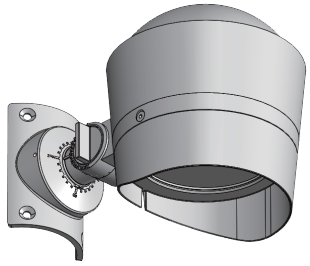

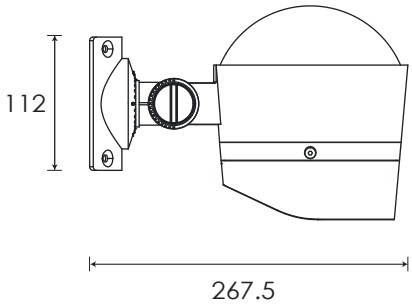

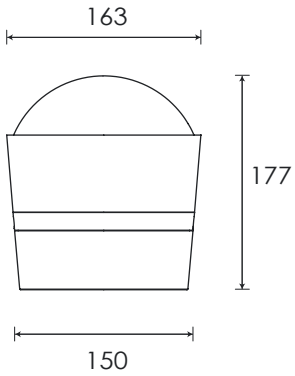

Specification

Housing	12# Die-Casting aluminum finishing or powder painting T=60-80μm.Adhesion of ISO class 1/ASTM class 4B
Light Window	Tempered Glass.T=3mm
Cable Gland	IP68 PG-9 PA66
Gasket	Tooling shaped seal
LED	NICHIA

LED Driver	Constant Voltage Input, Constant Current Output
Power Cable	Outside of luminaire 120V/240V: H05RN-F 3×1.0mm², L=4m
Dimming Support	TRIAC PWM Available 1-10V Dali Customized
Operating Restrict	Temperature of environment between -20˚C~40˚C

Regular Painting Color

Basic

Sanded Grey
KAL 7042

Secondary

Sanded Black
RAL 9005

Lens

Item Code		Referenced Degree(°)θ1/2			
	B57	**15°**	**25°**	**36°**	**60°**

Item	Light Source	Lens	The manufacturer selected lens degree(°)θ1/2	Input voltage(V)	Typical operating current(mA)	Typical consumption(W)	Typical luminance(lm)	IK rate
B9BTR0173	27W	B57	25°	240	240V=126	30	2657	07

Photometric

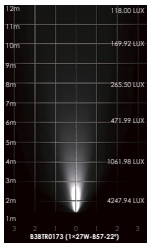

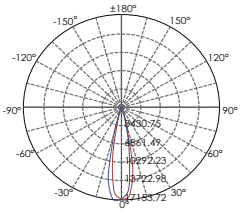

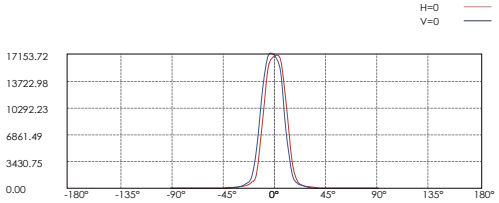

Lux distance Curve

Illuminance at a Distance

	Center Beam LUX	Beam Width V	Beam Width H
2m	4247.94 LUX	0.8m	0.8m
4m	1061.98 LUX	1.6m	1.6m
6m	471.99 LUX	2.3m	2.3m
8m	265.50 LUX	3.1m	3.1m
10m	169.92 LUX	3.9m	3.9m
12m	118.00 LUX	4.7m	4.7m

Vert.Spread:22.1 Horiz.Spread:22.1

Landscape / Street pole light
B9BTC0273 @30Wx2

Adjustable Beam Direction

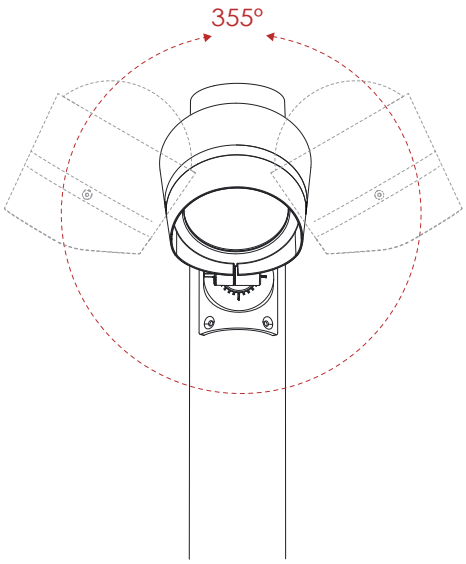

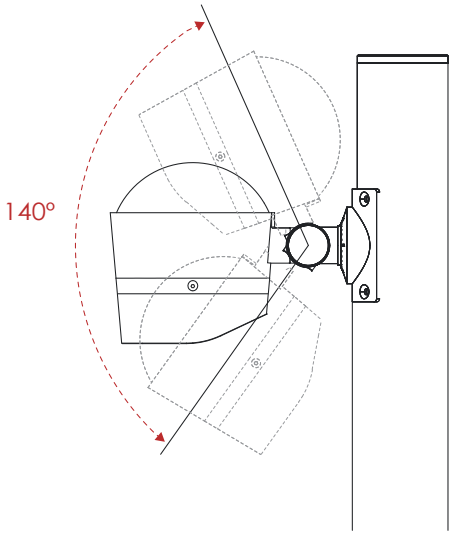

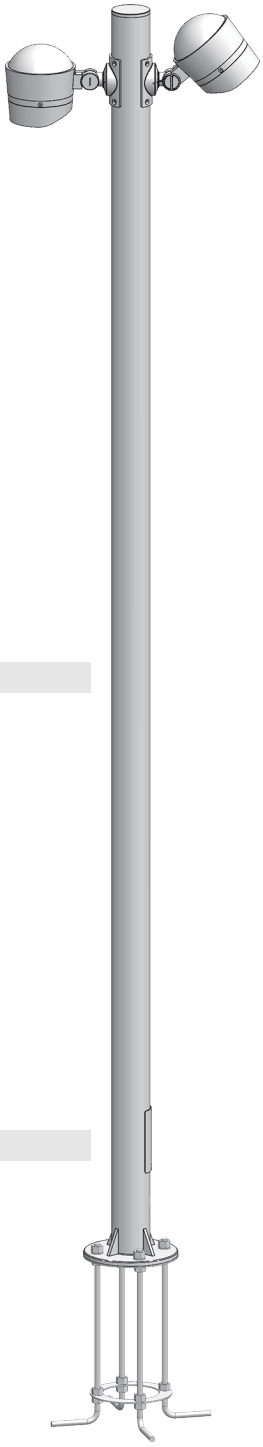

Regular Painting Color

Basic
Sanded Grey
KAL 7042

Secondary
Sanded Black
RAL 9005

Flag Base

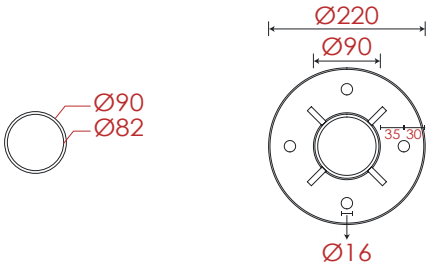

Pole Dimension & Material

Diameter : Ø90mm
Height : 3000mm (Customizeable)
Material : Aluminum

Accessories

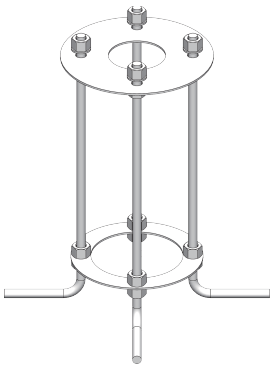

Base Dimension

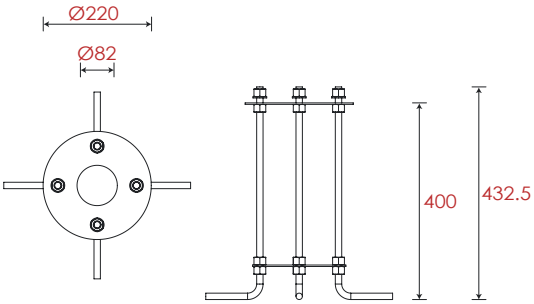

Item	Lens	The manufacturer selected lens degree(°)θ1/2	Input voltage(V)	Typical operating current(mA)	Typical consumption(W)	Typical luminance(lm)	IK rate
B9BTC0273	B57	25°	240	240V=126 × 2	30 × 2	2657 × 2	07

Landscape / Street pole light
B9BTR0173

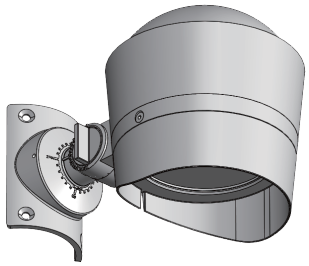

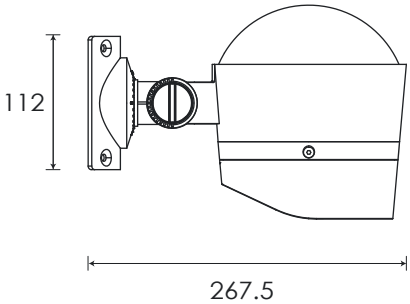

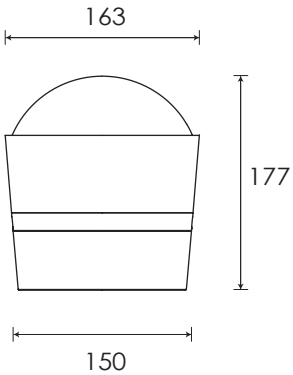

Specification

Housing	12# Die-Casting aluminum finishing or powder painting T=60-80μm.Adhesion of ISO class 1/ASTM class 4B
Light Window	Tempered Glass.T=3mm
Cable Gland	IP68 PG-9 PA66
Gasket	Tooling shaped seal
LED	NICHIA

LED Driver	Constant Voltage Input, Constant Current Output
Power Cable	Outside of luminaire 120V/240V: H05RN-F 3×1.0mm², L=4m
Dimming Support	TRIAC PWM Available 1-10V Dali Customized
Operating Restrict	Temperature of environment between -20˚C~40˚C

Regular Painting Color

Basic

Sanded Grey
KAL 7042

Secondary

Sanded Black
RAL 9005

Lens

Item Code		Referenced Degree(°)θ1/2			
	B57	**15°**	**25°**	**36°**	**60°**

Item	Light Source	Lens	The manufacturer selected lens degree(°)θ1/2	Input voltage(V)	Typical operating current(mA)	Typical consumption(W)	Typical luminance(lm)	IK rate
B9BTR0173	27W	B57	25°	240	240V=126	30	2657	07

Photometric

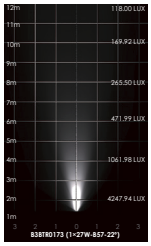

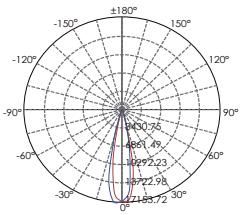

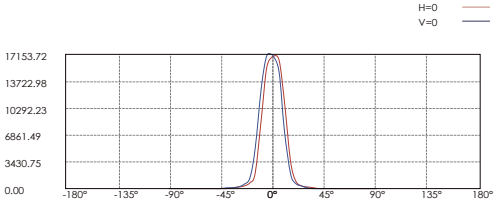

Lux distance Curve

Illuminance at a Distance

	Center Beam LUX	Beam Width V	Beam Width H
2m	4247.94 LUX	0.8m	0.8m
4m	1061.98 LUX	1.6m	1.6m
6m	471.99 LUX	2.3m	2.3m
8m	265.50 LUX	3.1m	3.1m
10m	169.92 LUX	3.9m	3.9m
12m	118.00 LUX	4.7m	4.7m

Vert.Spread:22.1 Horiz.Spread:22.1

Landscape / Street pole light
B9BTC0373 @30Wx3

Adjustable Beam Direction

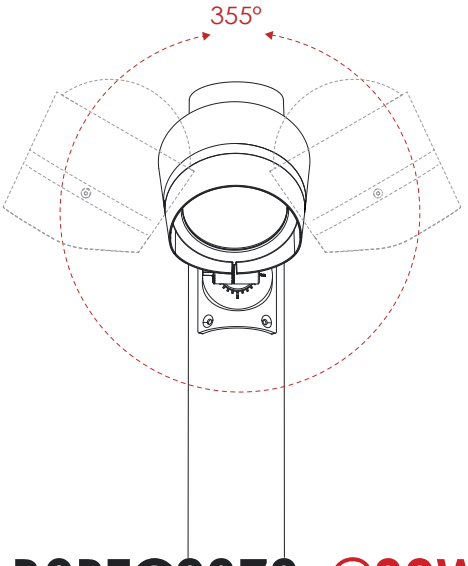

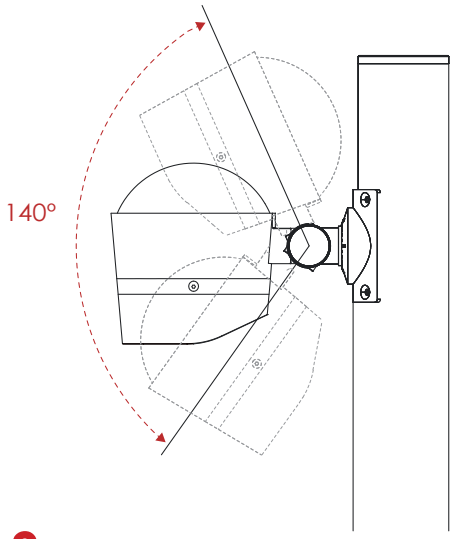

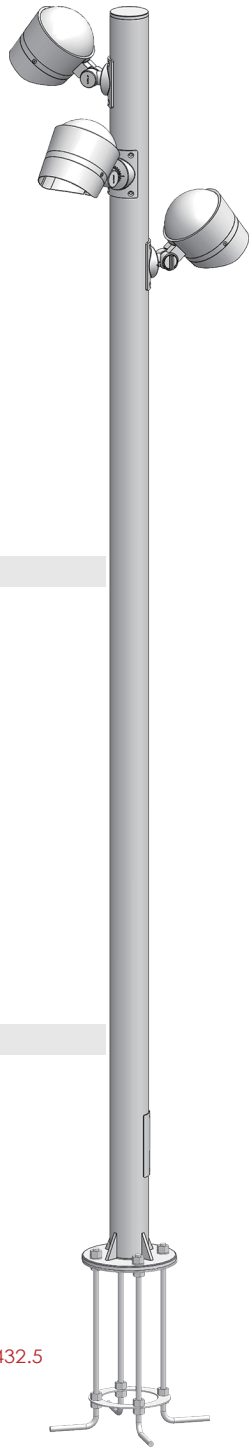

B9BTC0373 @30W×3

Regular Painting Color

Basic	Secondary
Sanded Grey **KAL 7042**	Sanded Black **RAL 9005**

Flag Base

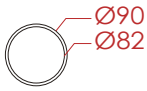

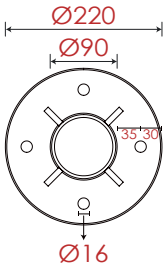

Pole Dimension & Material

Diameter : Ø90mm
Height : 3000mm (Customizeable)
Material : Aluminum

Accessories

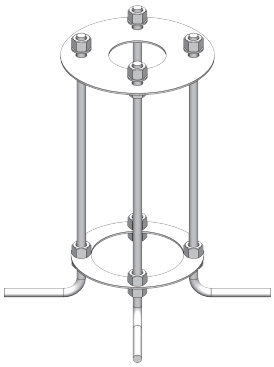

Base Dimension

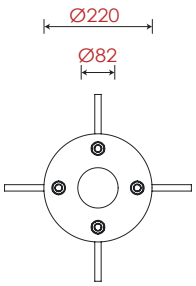

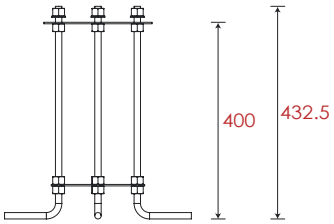

Item	Lens	The manufacturer selected lens degree(°)θ1/2	Input voltage(V)	Typical operating current(mA)	Typical consumption(W)	Typical luminance(lm)	IK rate
B9BTC0373	B57	25°	240	240V=126 × 3	30 × 3	2657 × 3	07

Landscape / Street pole light
B9BTR0173

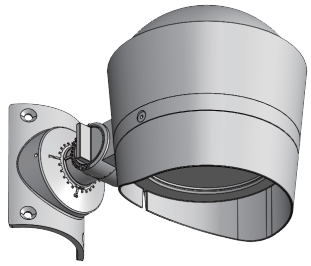

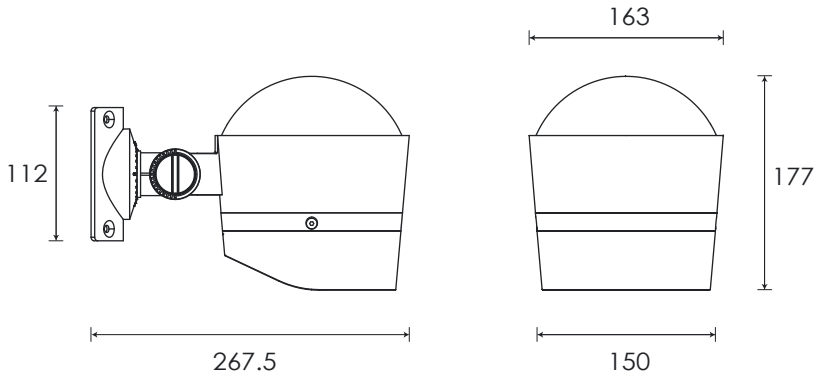

Specification

Housing	12# Die-Casting aluminum finishing or powder painting T=60-80μm.Adhesion of ISO class 1/ASTM class 4B
Light Window	Tempered Glass.T=3mm
Cable Gland	IP68 PG-9 PA66
Gasket	Tooling shaped seal
LED	NICHIA
LED Driver	Constant Voltage Input, Constant Current Output
Power Cable	Outside of luminaire 120V/240V: H05RN-F 3×1.0mm², L=4m
Dimming Support	TRIAC PWM Available 1-10V Dali Customized
Operating Restrict	Temperature of environment between -20˚C~40˚C

Regular Painting Color

Basic

Sanded Grey
KAL 7042

Secondary

Sanded Black
RAL 9005

Lens

Item Code		Referenced Degree(°)θ1/2			
	B57	**15°**	**25°**	**36°**	**60°**

Item	Light Source	Lens	The manufacturer selected lens degree(°)θ1/2	Input voltage(V)	Typical operating current(mA)	Typical consumption(W)	Typical luminance(lm)	IK rate
B9BTR0173	27W	B57	25°	240	240V=126	30	2657	07

Photometric

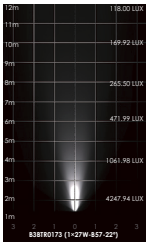

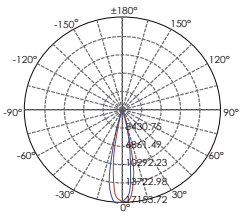

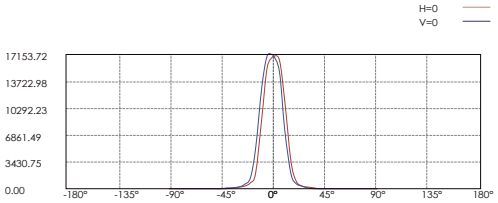

Lux distance Curve

Illuminance at a Distance

	Center Beam LUX	Beam Width V	Beam Width H
2m	4247.94 LUX	0.8m	0.8m
4m	1061.98 LUX	1.6m	1.6m
6m	471.99 LUX	2.3m	2.3m
8m	265.50 LUX	3.1m	3.1m
10m	169.92 LUX	3.9m	3.9m
12m	118.00 LUX	4.7m	4.7m

Vert.Spread:22.1 Horiz.Spread:22.1

Landscape / Street pole light
B9BTC0573 @30Wx5

Adjustable Beam Direction

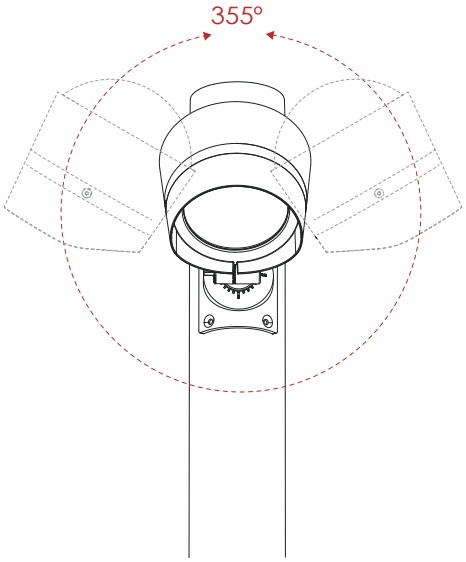

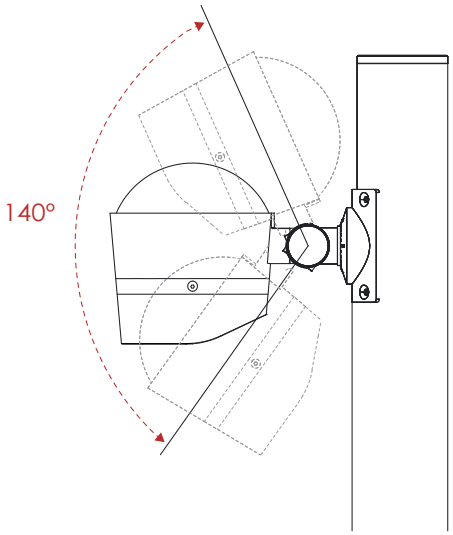

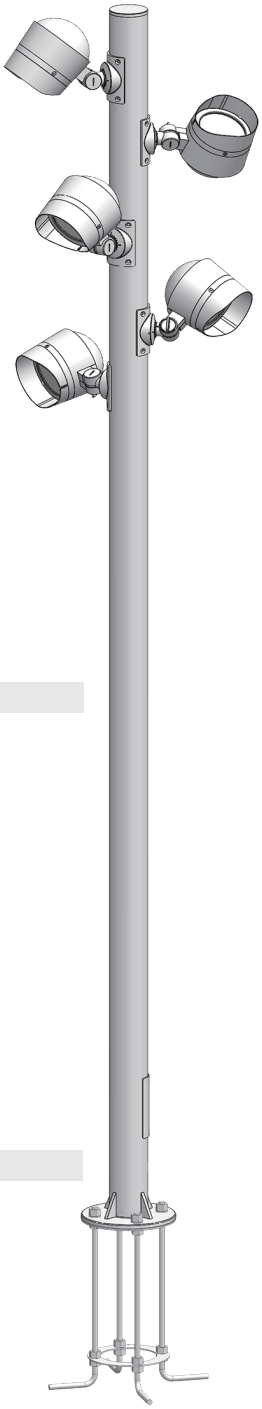

Regular Painting Color

Basic	Secondary
Sanded Grey **KAL 7042**	Sanded Black **RAL 9005**

Flag Base

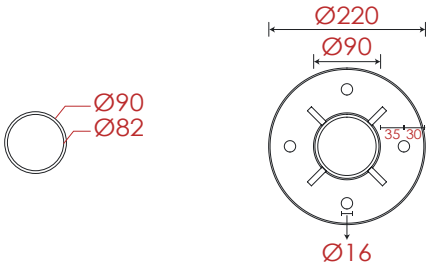

Pole Dimension & Material

Diameter : Ø90mm
Height : 3000mm (Customizeable)
Material : Aluminum

Accessories

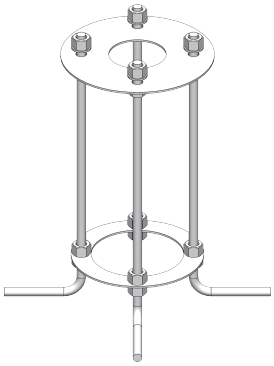

Base Dimension

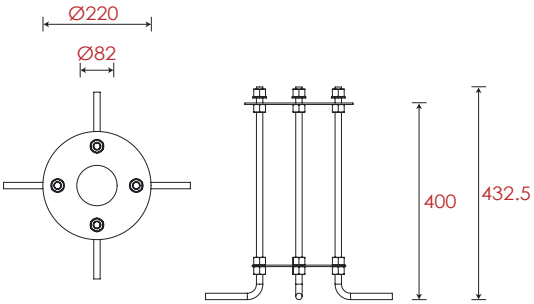

Item	Lens	The manufacturer selected lens degree(°)θ1/2	Input voltage(V)	Typical operating current(mA)	Typical consumption(W)	Typical luminance(lm)	IK rate
B9BTC0573	B57	25°	240	240V=126 × 5	30 × 5	2657 × 5	07

Landscape / Street pole light
B9BTR0173

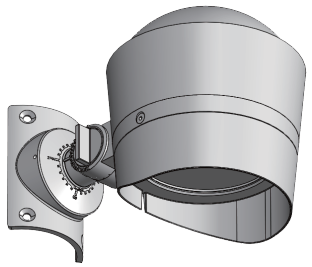

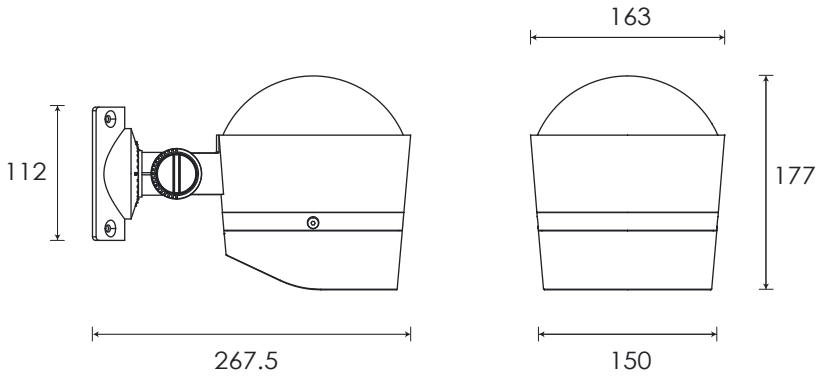

Specification

Housing	12# Die-Casting aluminum finishing or powder painting T=60-80μm.Adhesion of ISO class 1/ASTM class 4B
Light Window	Tempered Glass.T=3mm
Cable Gland	IP68 PG-9 PA66
Gasket	Tooling shaped seal
LED	NICHIA
LED Driver	Constant Voltage Input, Constant Current Output
Power Cable	Outside of luminaire 120V/240V: H05RN-F 3×1.0mm², L=4m
Dimming Support	TRIAC PWM Available 1-10V Dali Customized
Operating Restrict	Temperature of environment between -20˚C~40˚C

Regular Painting Color

Basic

Sanded Grey
KAL 7042

Secondary

Sanded Black
RAL 9005

Lens

Item Code		Referenced Degree(°)θ1/2			
	B57	**15°**	**25°**	**36°**	**60°**

Item	Light Source	Lens	The manufacturer selected lens degree(°)θ1/2	Input voltage(V)	Typical operating current(mA)	Typical consumption(W)	Typical luminance(lm)	IK rate
B9BTR0173	27W	B57	25°	240	240V=126	30	2657	07

Photometric

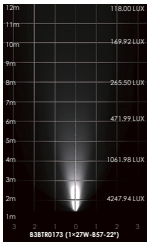

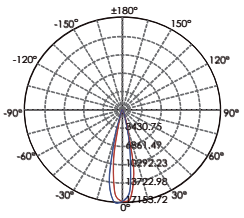

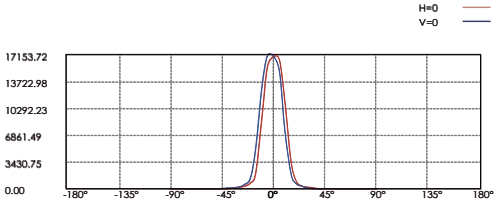

Lux distance Curve

Illuminance at a Distance

	Center Beam LUX	Beam Width V	Beam Width H
2m	4247.94 LUX	0.8m	0.8m
4m	1061.98 LUX	1.6m	1.6m
6m	471.99 LUX	2.3m	2.3m
8m	265.50 LUX	3.1m	3.1m
10m	169.92 LUX	3.9m	3.9m
12m	118.00 LUX	4.7m	4.7m

Vert.Spread:22.1 Horiz.Spread:22.1

Landscape / Street pole light
B9CQU-1-1 @90W

Adjustable Beam Direction

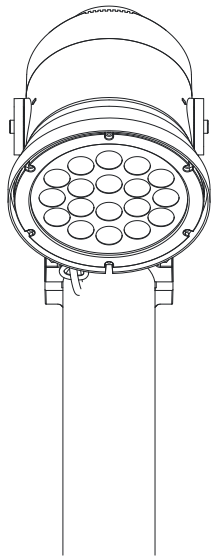

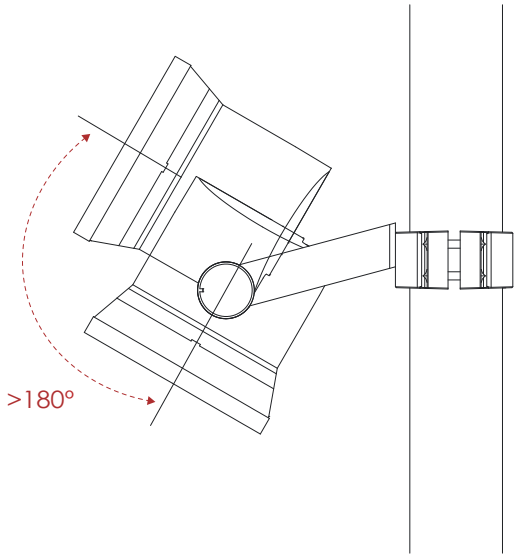

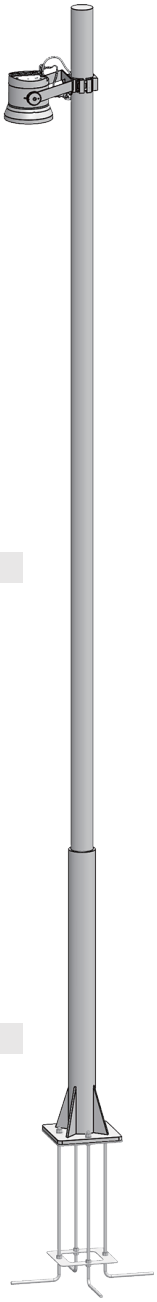

Regular Painting Color

Basic
Sanded Grey
KAL 7042

Secondary
Sanded Black
RAL 9005

Flag Base

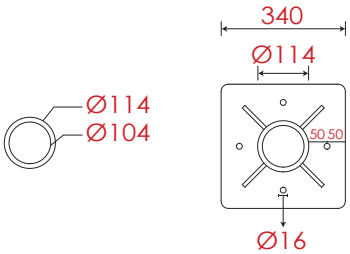

Pole Dimension & Material

Diameter : Ø114mm
Height : 6000mm (Customizeable)
Material : Aluminum

Accessories

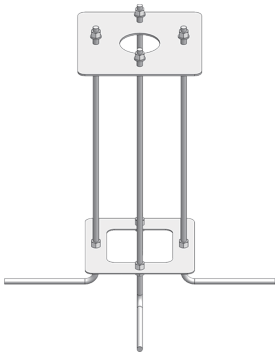

Base Dimension

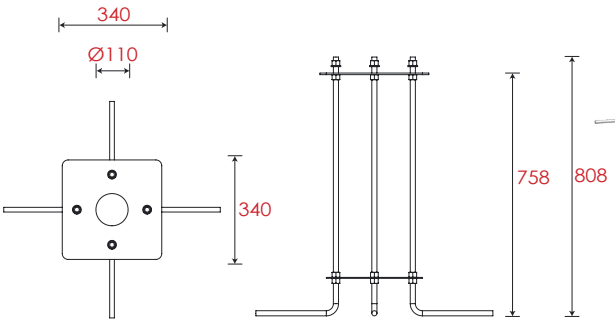

Item	Light Source	Input voltage(V)	Typical operating current(mA)	Typical consumption(W)	Typical luminance(lm)	IK rate
B9CQU-1-1	18x4.5W	240	385	90	7771	07

Landscape / Street pole light
B9CQU1865

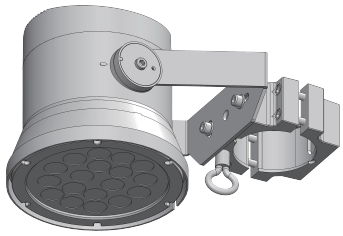

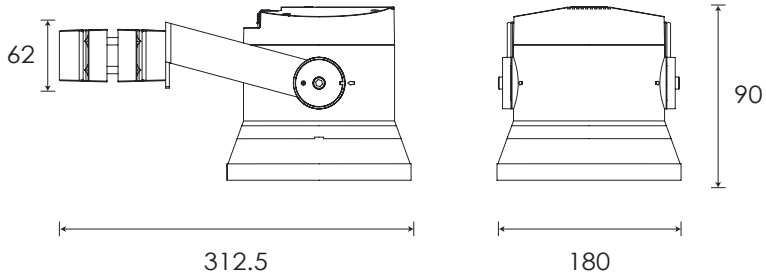

Specification

Housing	2# Die-casting aluminum finishing or powder painting T=60-80μm. Adhesion of ISO class 1/ASTM class 4B
Light Window	Tempered glass.T=3mm
LED Driver	Constant Voltage Input, Constant Current Output
LED	NICHIA
Cable Gland	IP68 PG-11 PA66
Power Cable	Outside of luminaire 12V/24V: H07RN-F 2×1.0mm², L=2.0m 120V/240V: H07RN-F 3×1.0mm², L=2.0m
Gasket	Tooling shaped seal
Bracket	Iron powder coated. T=2.5mm: B3CPU0125 T=4.5mm: B3CQU1856 T=5mm: B2CRU2465

Regular Painting Color

Basic
Sanded Grey
KAL 7042

Secondary
Sanded Black
RAL 9005

Lens

Item Code		Referenced Degree(°)θ1/2				
	B92	**8°**	**15°**	**20°**	**30°**	**50°**

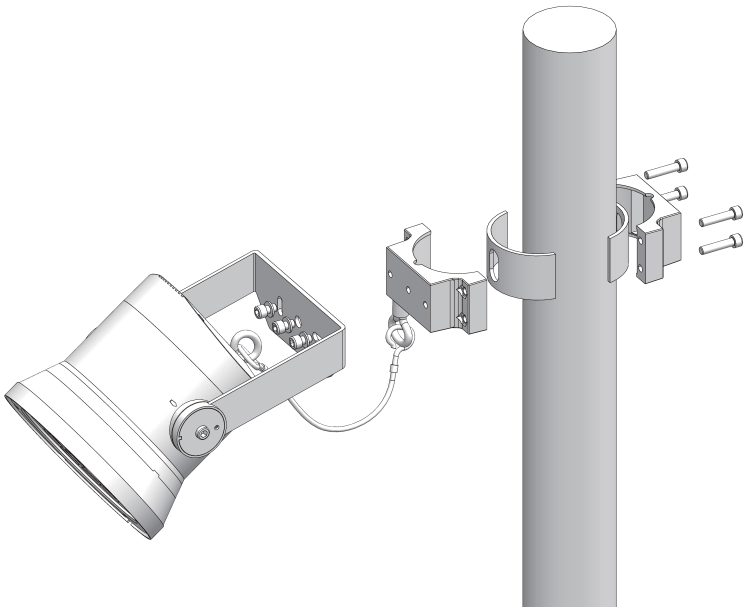

Item	Light Source	Input voltage(V)	Typical operating current(mA)	Typical consumption(W)	Typical luminance(lm)	IK rate
B9CQU1865	18x4.5W	240	385	90	7771	07

Photometric

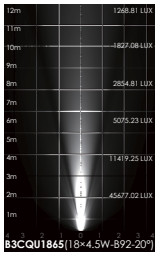

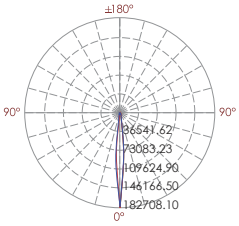

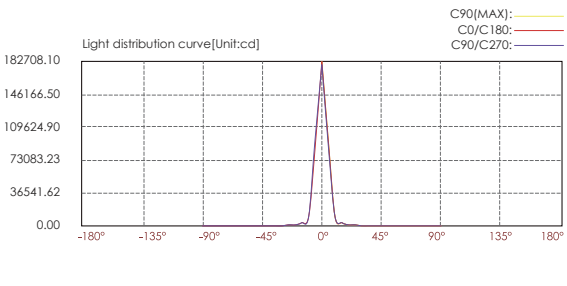

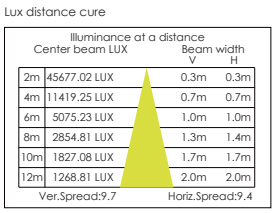

Landscape / Street pole light
B9CQU-2-2 @90Wx2

Adjustable Beam Direction

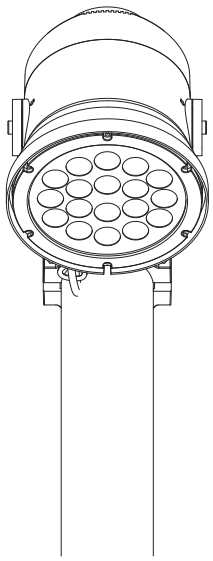

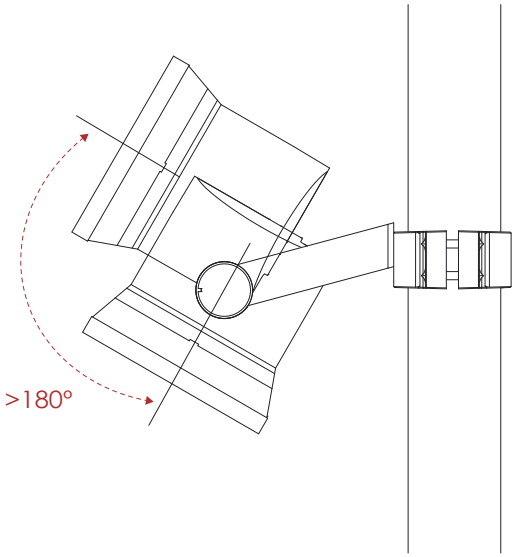

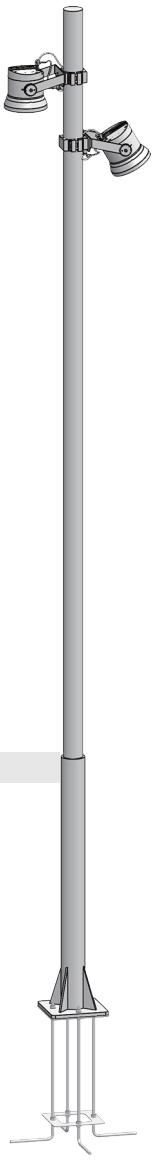

B9CQU-2-1 @90W×2

Regular Painting Color

Basic	Secondary
Sanded Grey **KAL 7042**	Sanded Black **RAL 9005**

Flag Base

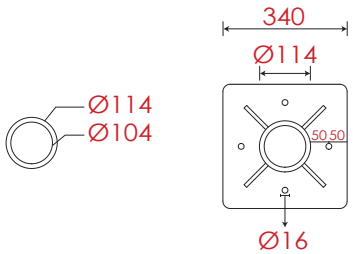

Pole Dimension & Material

Diameter : Ø114mm
Height : 6000mm (Customizeable)
Material : Aluminum

Accessories

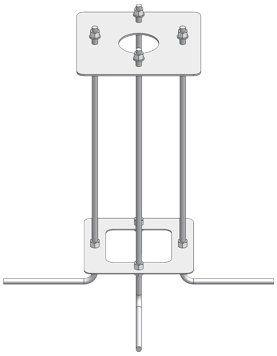

Base Dimension

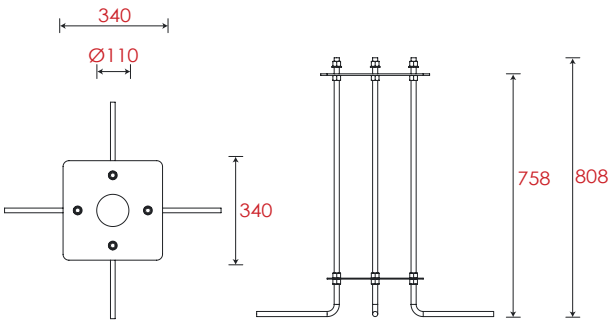

Item	Light Source	Input voltage(V)	Typical operating current(mA)	Typical consumption(W)	Typical luminance(lm)	IK rate
B9CQU-2-1	18x4.5W	240	385 x 2	90 x 2	7771 x 2	07

Landscape / Street pole light
B9CQU1865

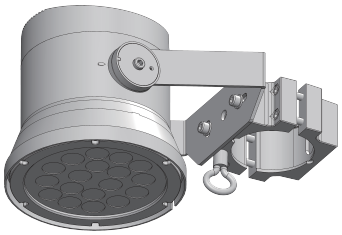

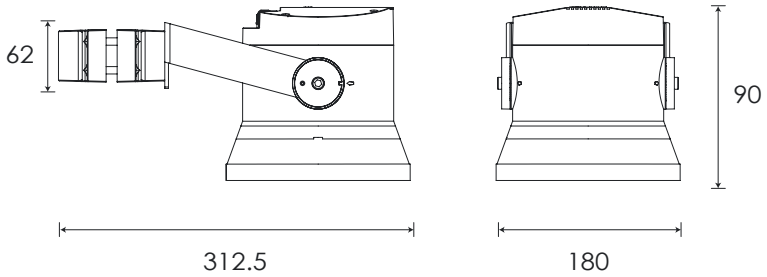

Specification

Housing	2# Die-casting aluminum finishing or powder painting T=60-80μm. Adhesion of ISO class 1/ASTM class 4B
Light Window	Tempered glass.T=3mm
LED Driver	Constant Voltage Input, Constant Current Output
LED	NICHIA
Cable Gland	IP68 PG-11 PA66
Power Cable	Outside of luminaire 12V/24V: H07RN-F 2×1.0mm², L=2.0m 120V/240V: H07RN-F 3×1.0mm², L=2.0m
Gasket	Tooling shaped seal
Bracket	Iron powder coated. T=2.5mm: B3CPU0125 T=4.5mm: B3CQU1856 T=5mm: B2CRU2465

Regular Painting Color

Basic
Sanded Grey
KAL 7042

Secondary
Sanded Black
RAL 9005

Lens

Item Code		Referenced Degree(°)θ1/2				
	B92	**8°**	**15°**	**20°**	**30°**	**50°**

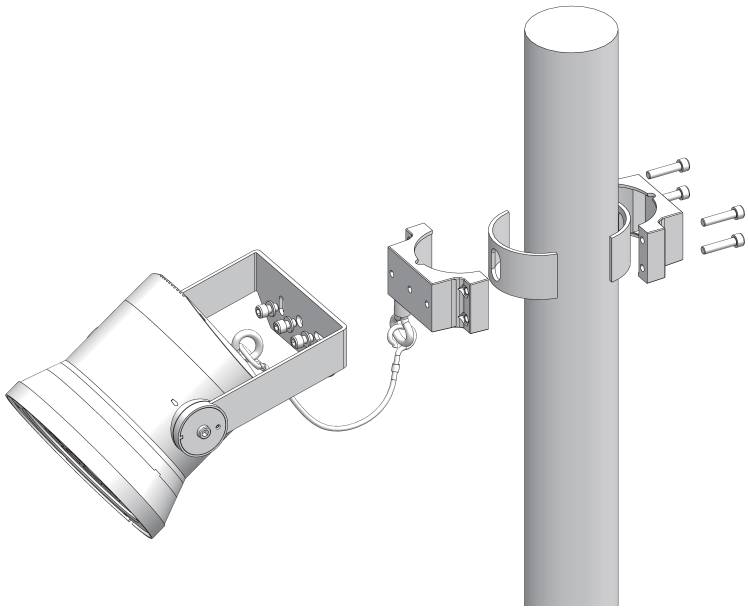

Item	Light Source	Input voltage(V)	Typical operating current(mA)	Typical consumption(W)	Typical luminance(lm)	IK rate
B9CQU1865	18x4.5W	240	385	90	7771	07

Photometric

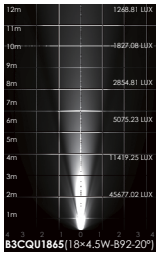

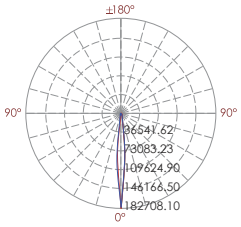

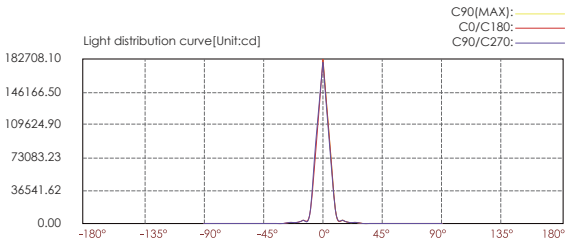

Lux distance cure

Illuminance at a distance

	Center beam LUX	Beam width V	Beam width H
2m	45677.02 LUX	0.3m	0.3m
4m	11419.25 LUX	0.7m	0.7m
6m	5075.23 LUX	1.0m	1.0m
8m	2854.81 LUX	1.3m	1.4m
10m	1827.08 LUX	1.7m	1.7m
12m	1268.81 LUX	2.0m	2.0m

Ver.Spread:9.7 Horiz.Spread:9.4

Landscape / Street pole light
B9CQU-4-1 @90Wx4

Adjustable Beam Direction

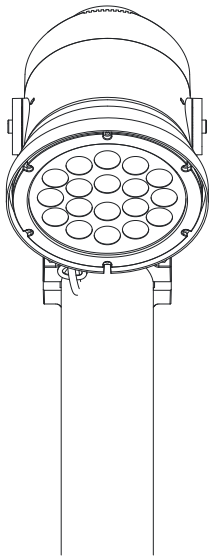

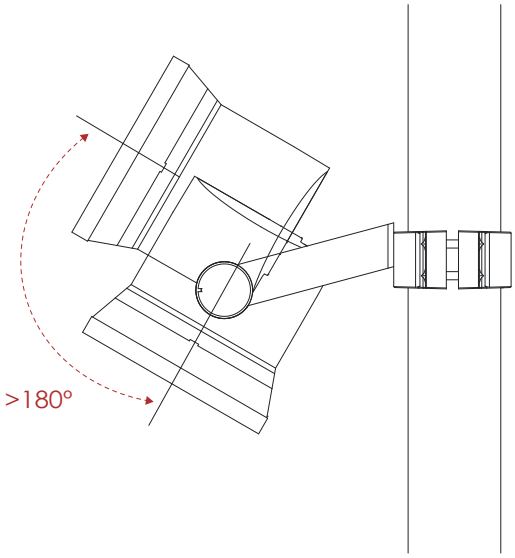

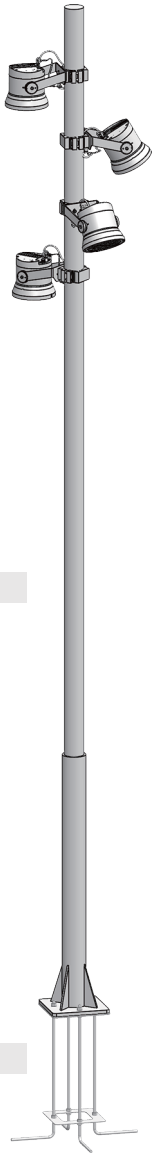

Regular Painting Color

Basic
Sanded Grey
KAL 7042

Secondary
Sanded Black
RAL 9005

Flag Base

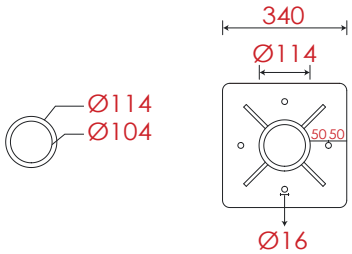

Pole Dimension & Material

Diameter : Ø114mm
Height : 6000mm (Customizeable)
Material : Aluminum

Accessories

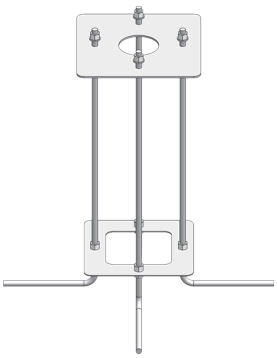

Base Dimension

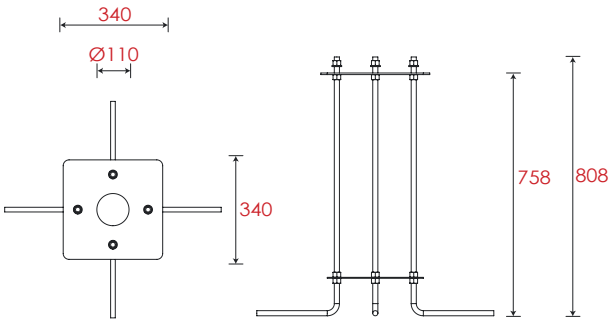

Item	Light Source	Input voltage(V)	Typical operating current(mA)	Typical consumption(W)	Typical luminance(lm)	IK rate
B9CQU-4-1	18x4.5W	240	385 x 4	90 x 4	7771 x 4	07

Landscape / Street pole light
B9CQU1865

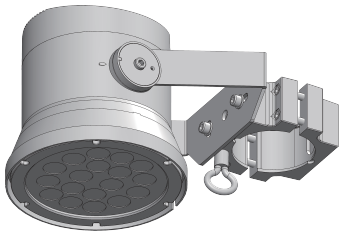

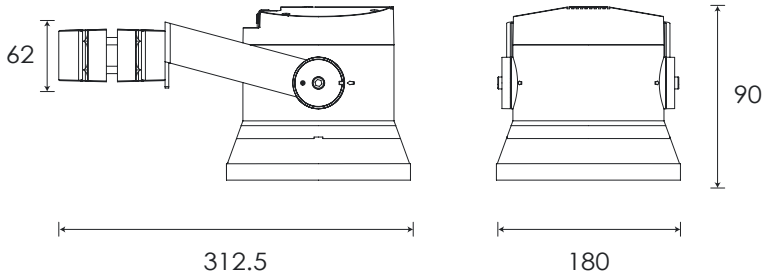

Specification

Housing	2# Die-casting aluminum finishing or powder painting T=60-80μm. Adhesion of ISO class 1/ASTM class 4B
Light Window	Tempered glass.T=3mm
LED Driver	Constant Voltage Input, Constant Current Output
LED	NICHIA
Cable Gland	IP68 PG-11 PA66
Power Cable	Outside of luminaire 12V/24V: H07RN-F 2×1.0mm², L=2.0m 120V/240V: H07RN-F 3×1.0mm², L=2.0m
Gasket	Tooling shaped seal
Bracket	Iron powder coated. T=2.5mm: B3CPU0125 T=4.5mm: B3CQU1856 T=5mm: B2CRU2465

Regular Painting Color

Basic

Sanded Grey
KAL 7042

Secondary

Sanded Black

Lens

Item Code		Referenced Degree(°)θ1/2				
	B92	**8°**	**15°**	**20°**	**30°**	**50°**

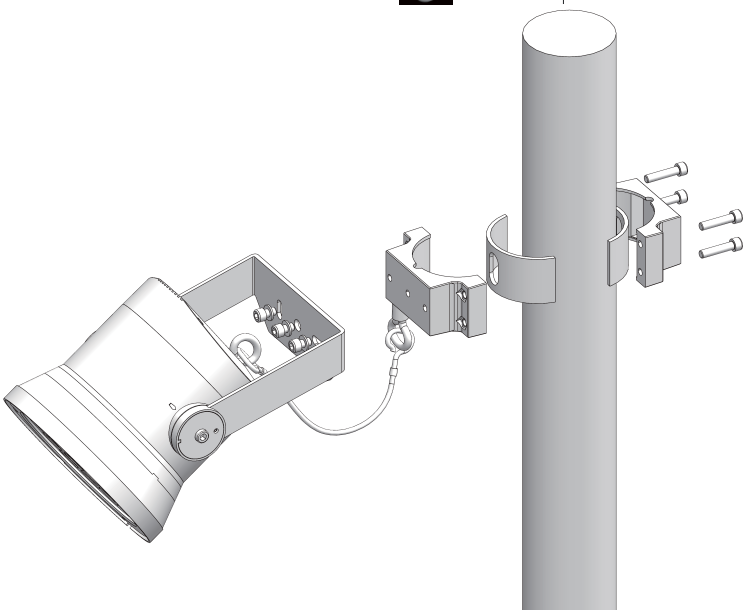

Item	Light Source	Input voltage(V)	Typical operating current(mA)	Typical consumption(W)	Typical luminance(lm)	IK rate
B9CQU1865	18x4.5W	240	385	90	7771	07

Photometric

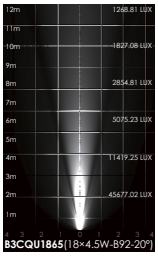

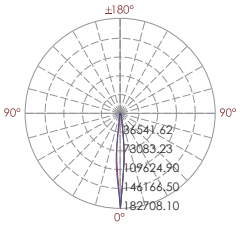

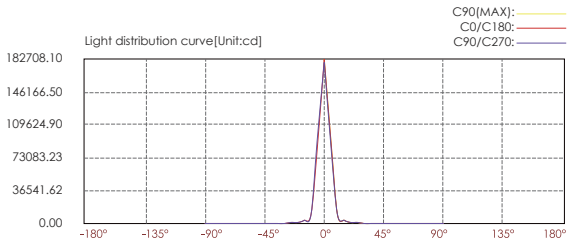

Lux distance cure

Illuminance at a distance

	Center beam LUX	Beam width V	Beam width H
2m	45677.02 LUX	0.3m	0.3m
4m	11419.25 LUX	0.7m	0.7m
6m	5075.23 LUX	1.0m	1.0m
8m	2854.81 LUX	1.3m	1.4m
10m	1827.08 LUX	1.7m	1.7m
12m	1268.81 LUX	2.0m	2.0m

Ver.Spread:9.7 Horiz.Spread:9.4

Landscape / Street pole light
B9CSR0126 @9W

Adjustable Beam Direction

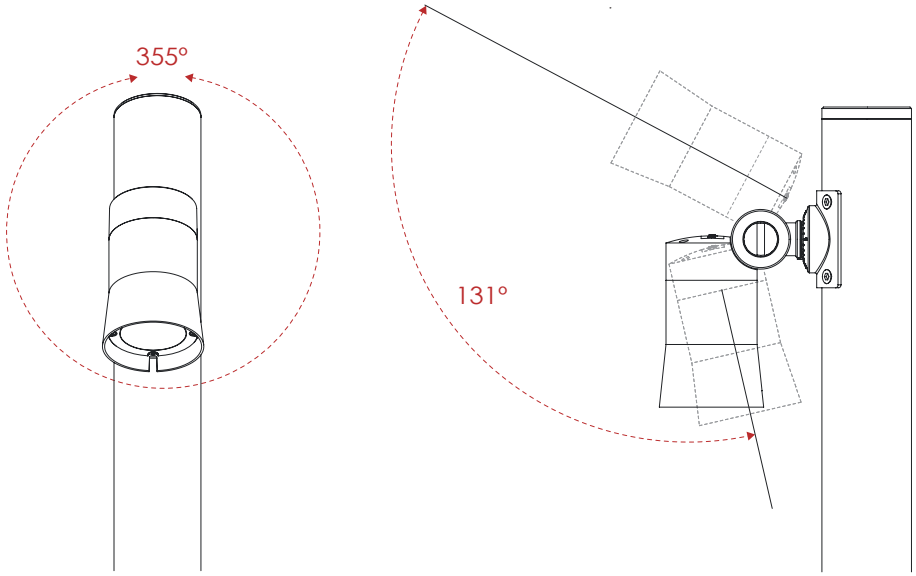

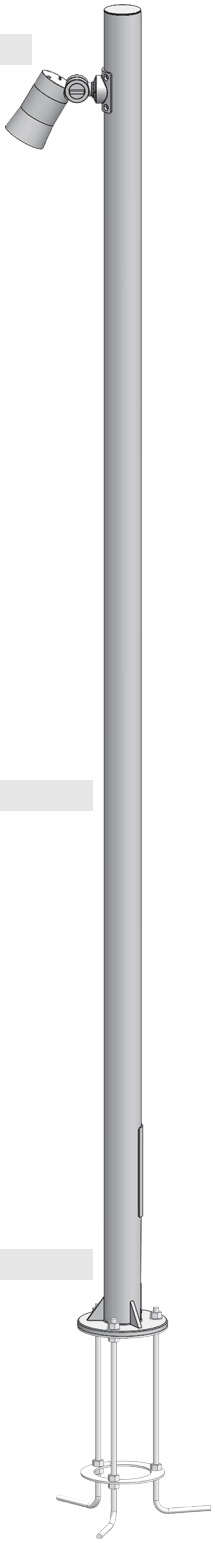

Regular Painting Color

Basic
Sanded Grey
KAL 7042

Secondary
Sanded Black
RAL 9005

Flag Base

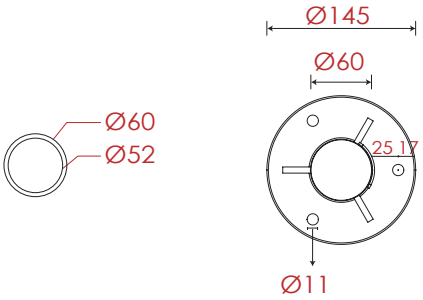

Pole Dimension

Diameter : Ø60mm
Height : 2200mm (Customizeable)
Material : Aluminum

Accessories

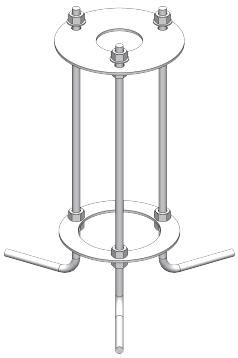

Base Dimension

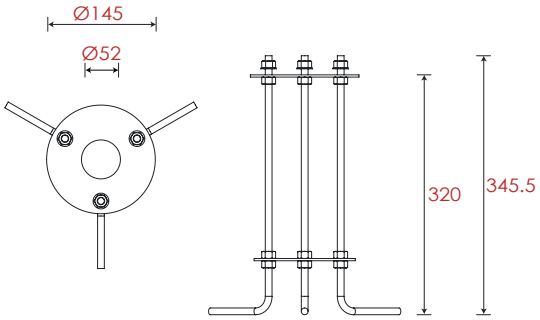

Item	Lens	The manufacturer selected lens degree(°)θ1/2	Input voltage(V)	Typical operating current(mA)	Typical consumption(W)	Typical luminance(lm)	IK rate
B9CSR0126	B71	24°	120 / 240	120V=117 240V=67	9	838	07

Landscape / Street pole light
B9CSR0126

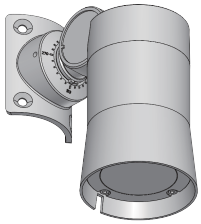

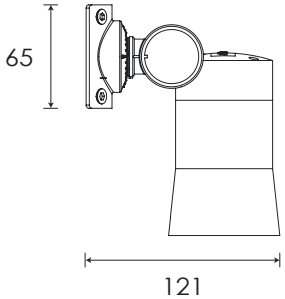

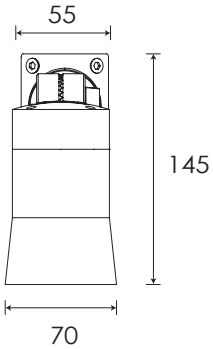

Specification

Housing	12# Die-Casting aluminum finishing or powder painting T=60-80μm.Adhesion of ISO class 1/ASTM class 4B
Light Window	Tempered Glass.T=3mm
Cable Gland	IP68 PG-9 PA66
Gasket	Tooling shaped seal
LED	NICHIA

LED Driver	Constant Voltage Input, Constant Current Output
Power Cable	Outside of luminaire 120V/240V: H05RN-F 3×1.0mm², L=3m
Dimming Support	TRIAC PWM Available 1-10V Dali Customized
Operating Restrict	Temperature of environment between -20˚C~40˚C

Regular Painting Color

Basic

Sanded Grey
KAL 7042

Secondary

Sanded Black
RAL 9005

Lens

Item Code		Referenced Degree(°)θ1/2				
	B71	**15°**	**24°**	**33°**	**45°**	**60°**

Item	Light Source	Lens	The manufacturer selected lens degree(°)θ1/2	Input voltage(V)	Typical operating current(mA)	Typical consumption(W)	Typical luminance(lm)	IK rate
B9CSR0126	7W	B71	24°	120 / 240	120V=117 240V=67	9	838	07

Photometric

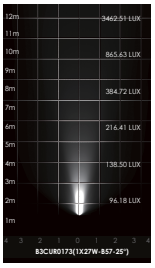

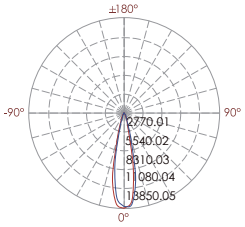

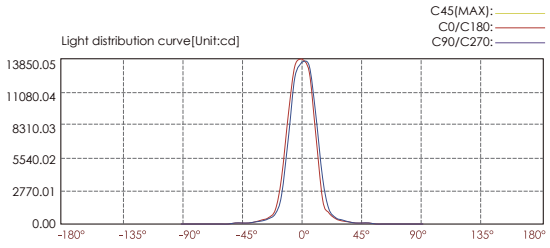

Lux distance curve

Illuminance at a distance

	Center beam LUX	Beam width V	Beam width H
2m	3462.51 LUX	0.8m	0.8m
4m	865.63 LUX	1.6m	1.6m
6m	384.72 LUX	2.5m	2.4m
8m	216.41 LUX	3.3m	3.3m
10m	138.50 LUX	4.1m	4.1m
12m	96.18 LUX	4.9m	4.9m

Ver.Spread:23.3 Horiz.Spread:23

Landscape / Street pole light
B9CSC0226 @9Wx2

Adjustable Beam Direction

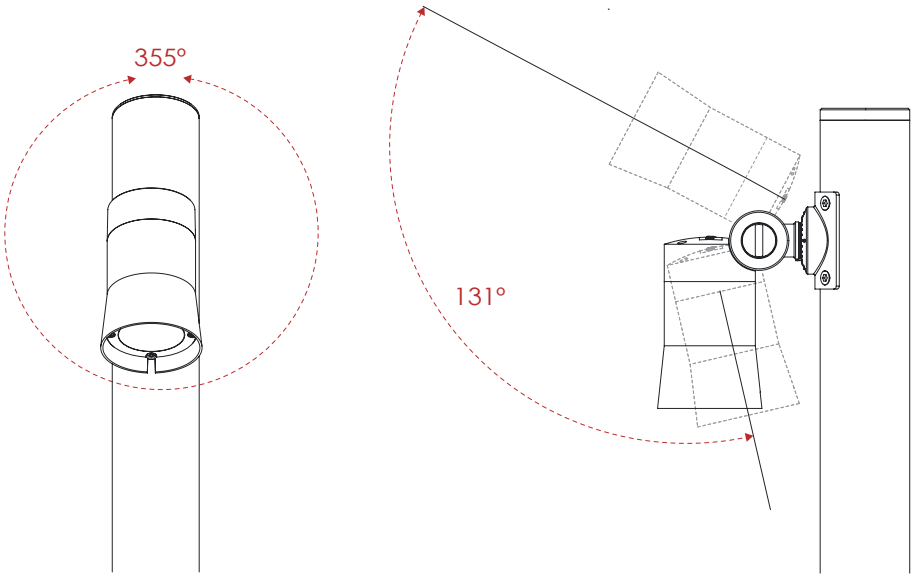

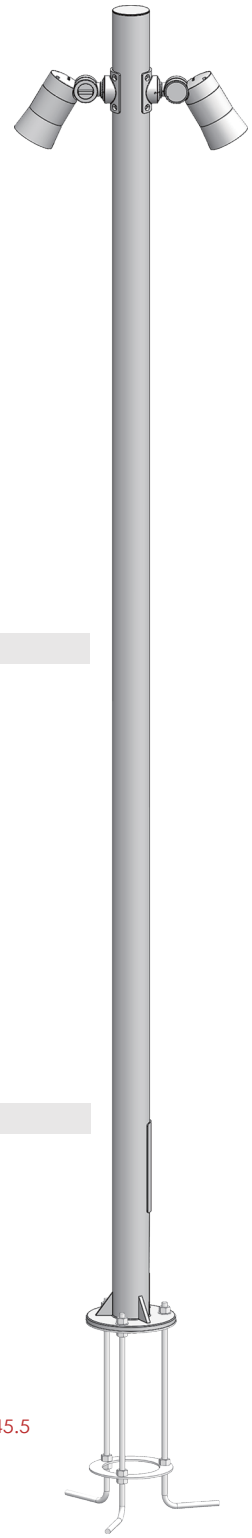

Regular Painting Color

Basic

Sanded Grey
KAL 7042

Secondary

Sanded Black
RAL 9005

Flag Base

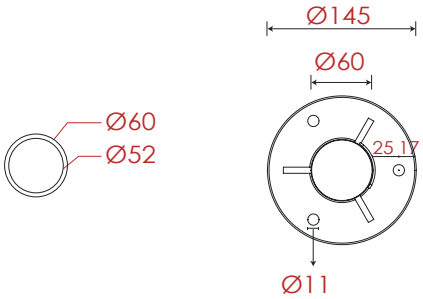

Pole Dimension

Diameter : Ø60mm
Height : 2200mm (Customizeable)
Material : Aluminum

Accessories

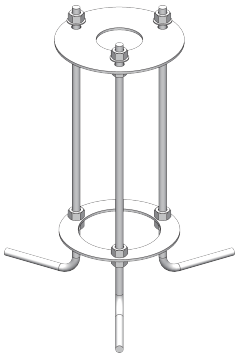

Base Dimension

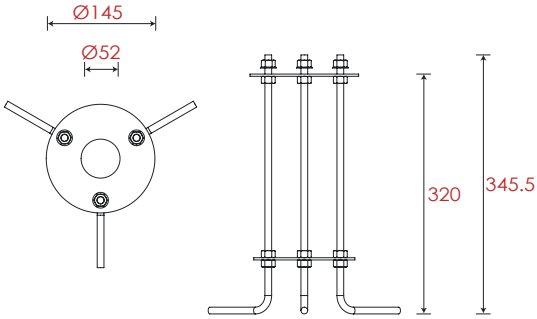

Item	Lens	The manufacturer selected lens degree(°)θ1/2	Input voltage(V)	Typical operating current(mA)	Typical consumption(W)	Typical luminance(lm)	IK rate
B9CSC0226	B71	24°	120 / 240	120V=117 × 2 240V=67 × 2	9 × 2	838 × 2	07

Landscape / Street pole light
B9CSR0126

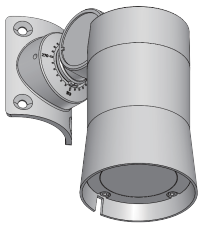

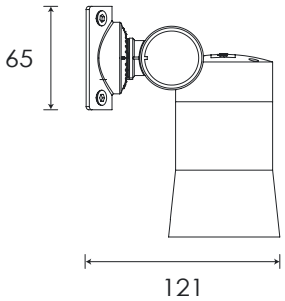

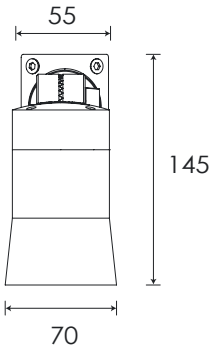

Specification

Housing	12# Die-Casting aluminum finishing or powder painting T=60-80μm.Adhesion of ISO class 1/ASTM class 4B
Light Window	Tempered Glass.T=3mm
Cable Gland	IP68 PG-9 PA66
Gasket	Tooling shaped seal
LED	NICHIA
LED Driver	Constant Voltage Input, Constant Current Output
Power Cable	Outside of luminaire 120V/240V: H05RN-F 3×1.0mm², L=3m
Dimming Support	TRIAC PWM Available 1-10V Dali Customized
Operating Restrict	Temperature of environment between -20˚C~40˚C

Regular Painting Color

Basic

Sanded Grey
KAL 7042

Secondary

Sanded Black
RAL 9005

Lens

Item Code		Referenced Degree(°)θ1/2				
	B71	**15°**	**24°**	**33°**	**45°**	**60°**

Item	Light Source	Lens	The manufacturer selected lens degree(°)θ1/2	Input voltage(V)	Typical operating current(mA)	Typical consumption(W)	Typical luminance(lm)	IK rate
B9CSR0126	7W	B71	24°	120 / 240	120V=117 240V=67	9	838	07

Photometric

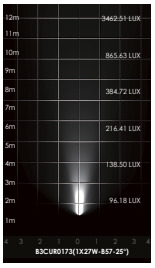

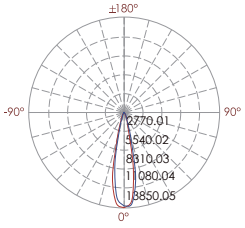

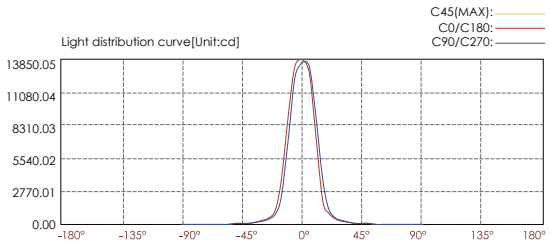

Lux distance curve

Illuminance at a distance

Center beam LUX		Beam width V	Beam width H
2m	3462.51 LUX	0.8m	0.8m
4m	865.63 LUX	1.6m	1.6m
6m	384.72 LUX	2.5m	2.4m
8m	216.41 LUX	3.3m	3.3m
10m	138.50 LUX	4.1m	4.1m
12m	96.18 LUX	4.9m	4.9m

Ver.Spread:23.3 Horiz.Spread:23

Landscape / Street pole light
B9CSR0126

Adjustable Beam Direction

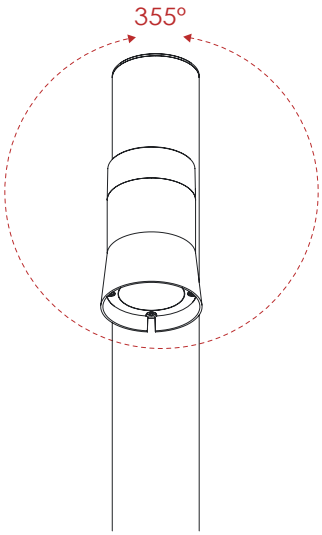

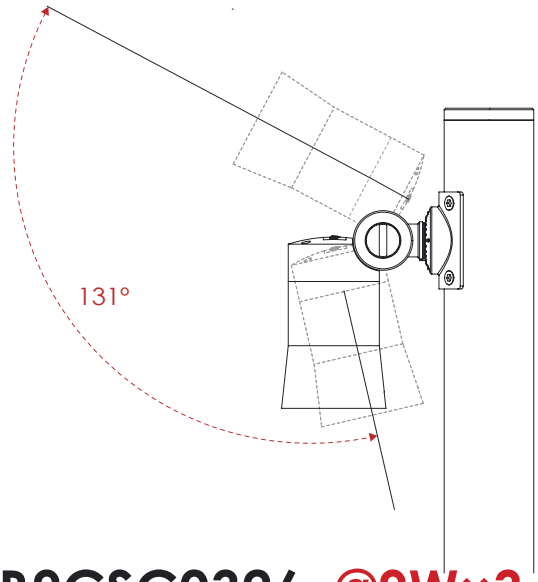

B9CSC0326 @9W×3

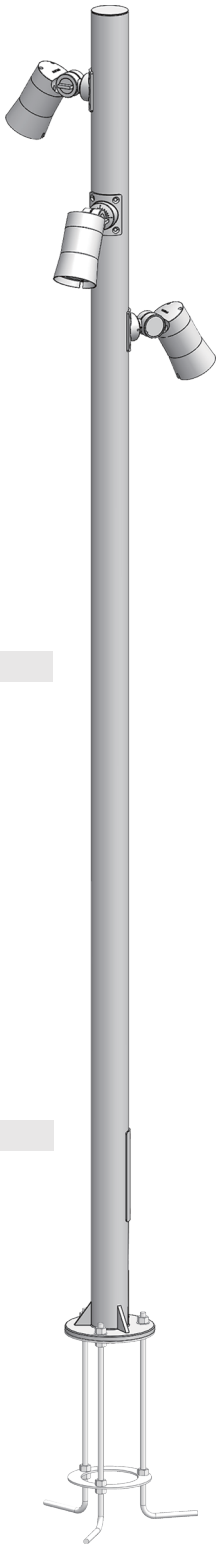

Regular Painting Color

Basic	Secondary
Sanded Grey **KAL 7042**	Sanded Black **RAL 9005**

Flag Base

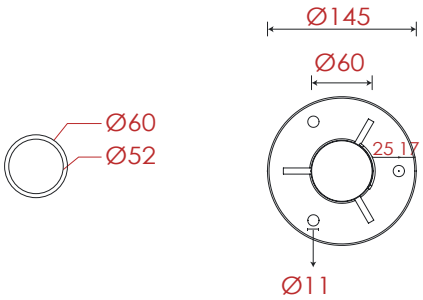

Pole Dimension

Diameter : Ø60mm
Height : 2200mm (Customizeable)
Material : Aluminum

Accessories

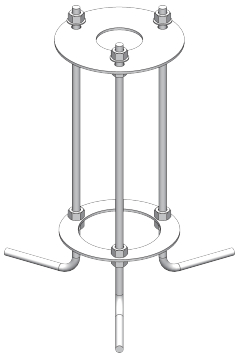

Base Dimension

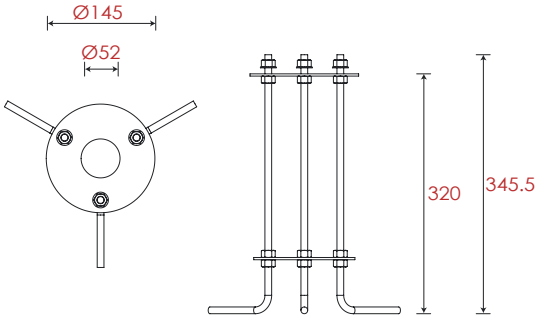

Item	Lens	The manufacturer selected lens degree(°)θ1/2	Input voltage(V)	Typical operating current(mA)	Typical consumption(W)	Typical luminance(lm)	IK rate
B9CSC0326	B71	24°	120 / 240	120V=117 × 3 240V=67 × 3	9 × 3	838 × 3	07

Landscape / Street pole light
B9CSR0126

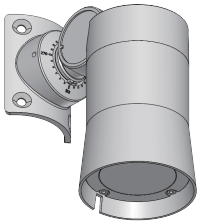

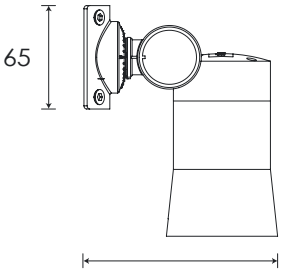

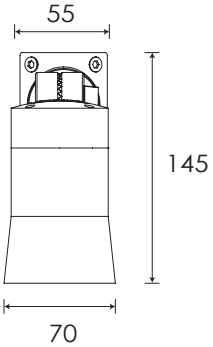

Specification

Housing	12# Die-Casting aluminum finishing or powder painting T=60-80μm.Adhesion of ISO class 1/ASTM class 4B
Light Window	Tempered Glass.T=3mm
Cable Gland	IP68 PG-9 PA66
Gasket	Tooling shaped seal
LED	NICHIA
LED Driver	Constant Voltage Input, Constant Current Output
Power Cable	Outside of luminaire 120V/240V: H05RN-F 3×1.0mm², L=3m
Dimming Support	TRIAC PWM Available 1-10V Dali Customized
Operating Restrict	Temperature of environment between -20˚C~40˚C

Regular Painting Color

Basic

Sanded Grey
KAL 7042

Secondary

Sanded Black
RAL 9005

Lens

Item Code		Referenced Degree(°)θ1/2				
	B71	**15°**	**24°**	**33°**	**45°**	**60°**

Item	Light Source	Lens	The manufacturer selected lens degree(°)θ1/2	Input voltage(V)	Typical operating current(mA)	Typical consumption(W)	Typical luminance(lm)	IK rate
B9CSR0126	7W	B71	24°	120 / 240	120V=117 240V=67	9	838	07

Photometric

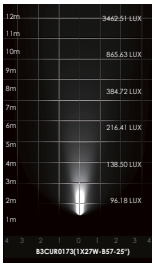

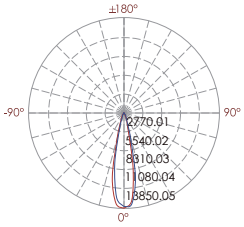

Light distribution curve[Unit:cd]

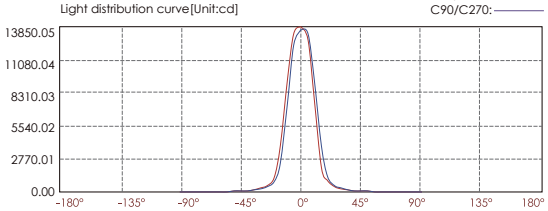

Lux distance curve

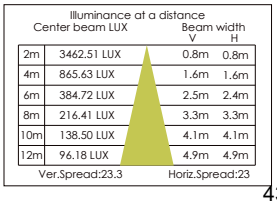

Illuminance at a distance

Center beam LUX		Beam width V	Beam width H
2m	3462.51 LUX	0.8m	0.8m
4m	865.63 LUX	1.6m	1.6m
6m	384.72 LUX	2.5m	2.4m
8m	216.41 LUX	3.3m	3.3m
10m	138.50 LUX	4.1m	4.1m
12m	96.18 LUX	4.9m	4.9m

Ver.Spread:23.3 Horiz.Spread:23

Landscape / Street pole light
B9CSC0526 @9Wx5

Adjustable Beam Direction

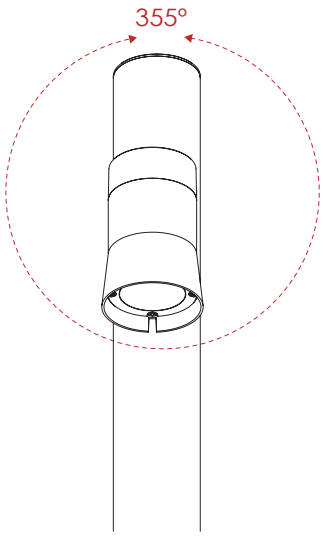

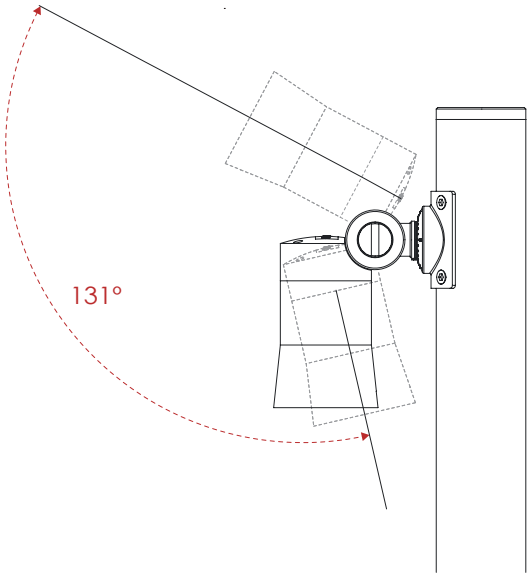

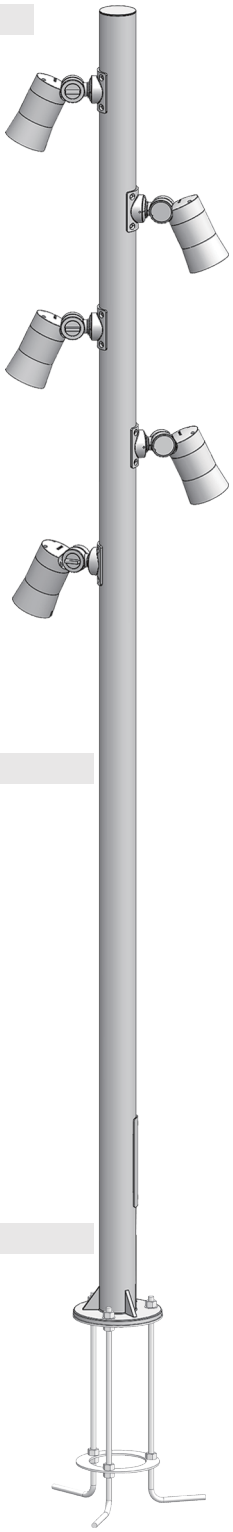

Regular Painting Color

Basic
Sanded Grey
KAL 7042

Secondary
Sanded Black
RAL 9005

Flag Base

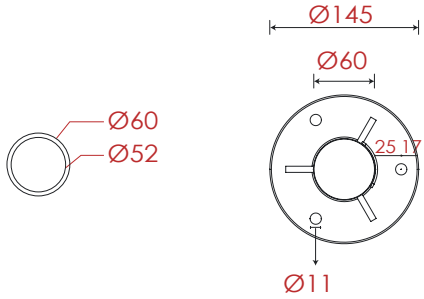

Pole Dimension

Diameter : Ø60mm
Height : 2200mm (Customizeable)
Material : Aluminum

Accessories

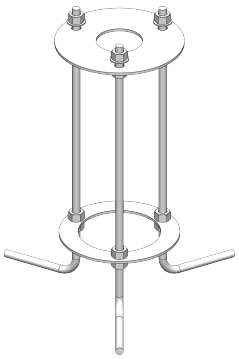

Base Dimension

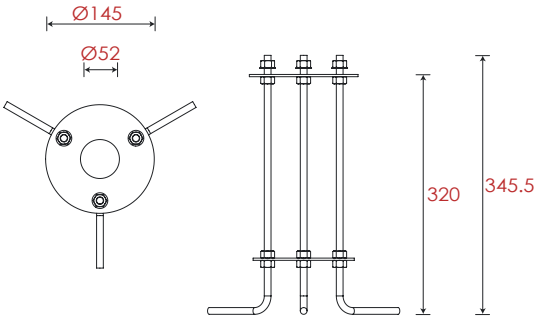

Item	Lens	The manufacturer selected lens degree(°)θ1/2	Input voltage(V)	Typical operating current(mA)	Typical consumption(W)	Typical luminance(lm)	IK rate
B9CSC0526	B71	24°	120 / 240	120V=117 × 5 240V=67 × 5	9 × 5	838 × 5	07

Landscape / Street pole light
B9CSR0126

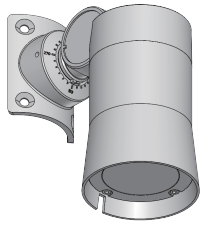

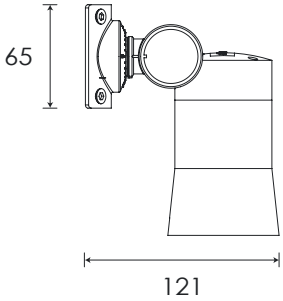

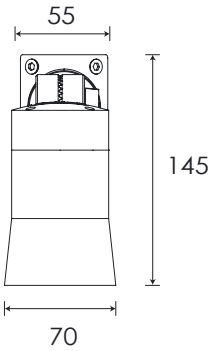

Specification

Housing	12# Die-Casting aluminum finishing or powder painting T=60-80μm.Adhesion of ISO class 1/ASTM class 4B
Light Window	Tempered Glass.T=3mm
Cable Gland	IP68 PG-9 PA66
Gasket	Tooling shaped seal
LED	NICHIA
LED Driver	Constant Voltage Input, Constant Current Output
Power Cable	Outside of luminaire 120V/240V: H05RN-F 3×1.0mm², L=3m
Dimming Support	TRIAC PWM Available 1-10V Dali Customized
Operating Restrict	Temperature of environment between -20˚C~40˚C

Regular Painting Color

Basic

Sanded Grey
KAL 7042

Secondary

Sanded Black
RAL 9005

Lens

Item Code		Referenced Degree(°)θ1/2				
	B71	**15°**	**24°**	**33°**	**45°**	**60°**

Item	Light Source	Lens	The manufacturer selected lens degree(°)θ1/2	Input voltage(V)	Typical operating current(mA)	Typical consumption(W)	Typical luminance(lm)	IK rate
B9CSR0126	7W	B71	24°	120 / 240	120V=117 240V=67	9	838	07

Photometric

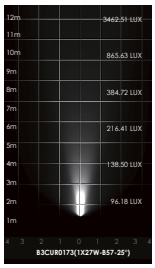

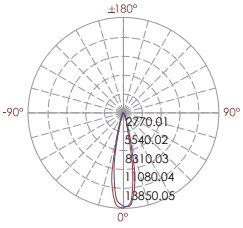

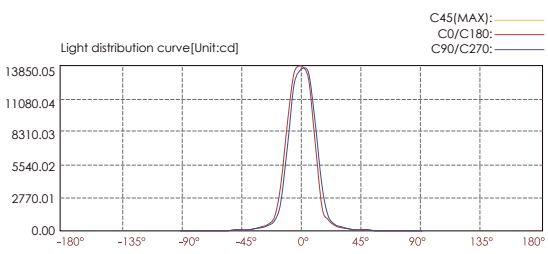

Lux distance curve

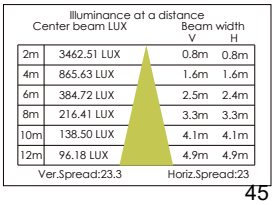

Illuminance at a distance		Beam width	
Center beam LUX		V	H
2m	3462.51 LUX	0.8m	0.8m
4m	865.63 LUX	1.6m	1.6m
6m	384.72 LUX	2.5m	2.4m
8m	216.41 LUX	3.3m	3.3m
10m	138.50 LUX	4.1m	4.1m
12m	96.18 LUX	4.9m	4.9m
Ver.Spread:23.3		Horiz.Spread:23	

Landscape / Street pole light
B9CTC0169 @20W

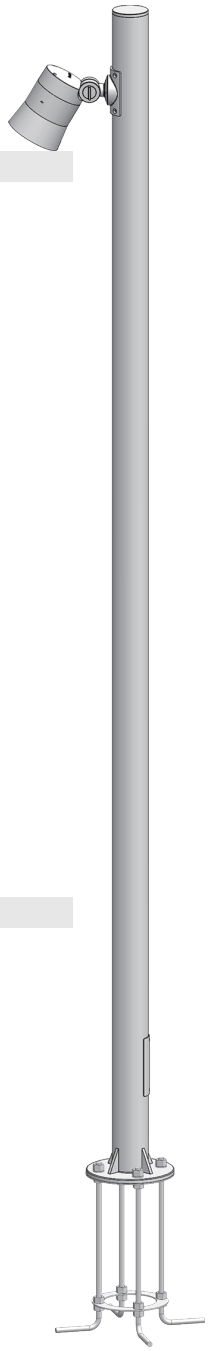

Adjustable Beam Direction

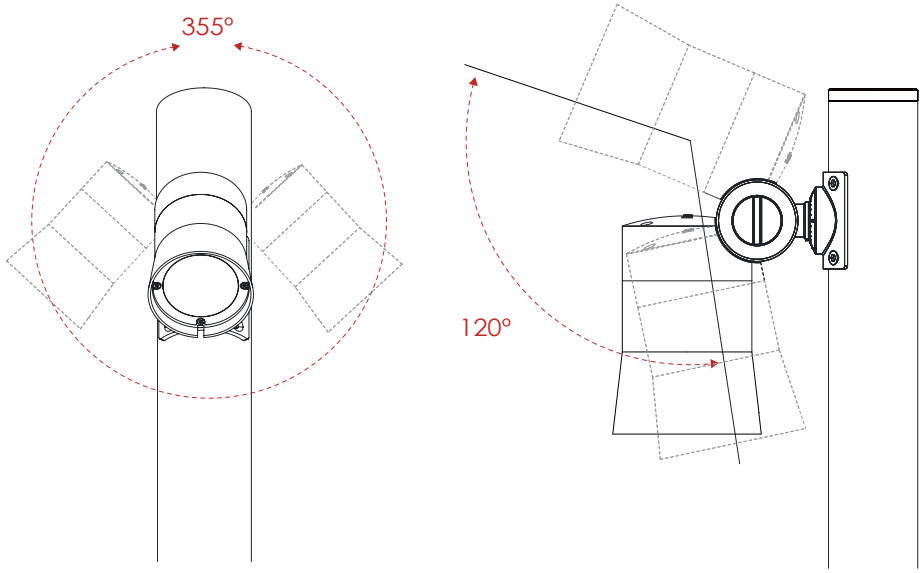

Regular Painting Color

Basic
Sanded Grey
KAL 7042

Secondary
Sanded Black
RAL 9005

Flag Base

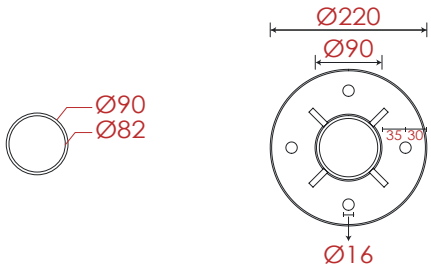

Pole Dimension & Material

Diameter : Ø90mm
Height : 3000mm (Customizeable)
Material : Aluminum

Accessories

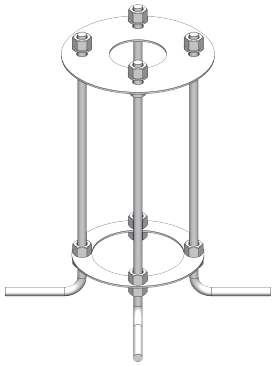

Base Dimension

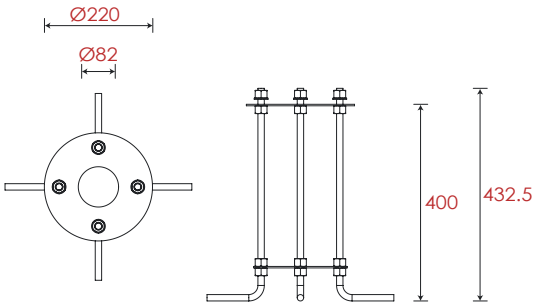

Item	Lens	The manufacturer selected lens degree(°)θ1/2	Input voltage(V)	Typical operating current(mA)	Typical consumption(W)	Typical luminance(lm)	IK rate
B9CTC0169	B76	20°	240	240V=89	20	2054	07

Landscape / Street pole light
B9CTC0169

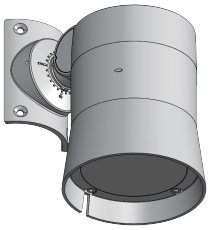

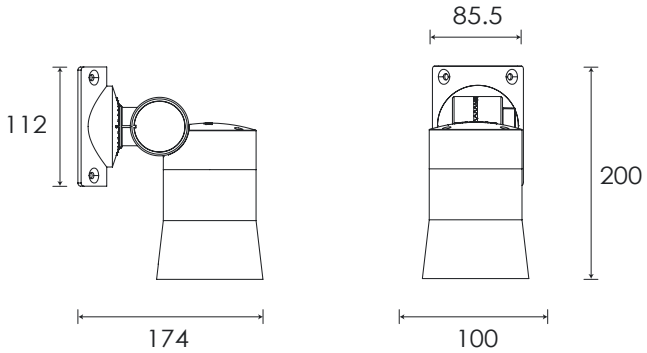

Specification

Housing	12# Die-Casting aluminum finishing or powder painting T=60-80μm.Adhesion of ISO class 1/ASTM class 4B
Light Window	Tempered Glass.T=3mm
Cable Gland	IP68 PG-9 PA66
Gasket	Tooling shaped seal
LED	NICHIA
LED Driver	Constant Voltage Input, Constant Current Output
Power Cable	Outside of luminaire 120V/240V: H05RN-F 3×1.0mm², L=4m
Dimming Support	TRIAC PWM Available 1-10V Dali Customized
Operating Restrict	Temperature of environment between -20˚C~40˚C

Regular Painting Color

Basic

Sanded Grey
KAL 7042

Secondary

Sanded Black
RAL 9005

Lens

Item Code		Referenced Degree(°)θ1/2			
	B76	**15°**	**20°**	**35°**	**50°**

Item	Light Source	Lens	The manufacturer selected lens degree(°)θ1/2	Input voltage(V)	Typical operating current(mA)	Typical consumption(W)	Typical luminance(lm)	IK rate
B9CTR0169	18W	B76	20°	240	240V=89	20	2054	07

Photometric

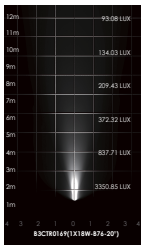

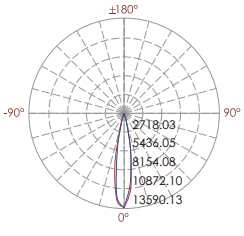

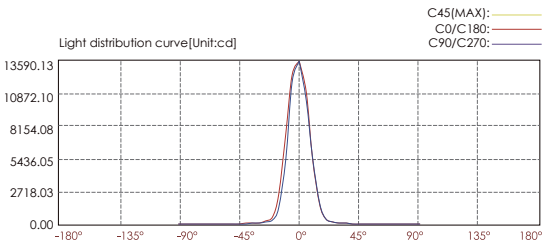

Lux distance curve

Illuminance at a distance

	Center beam LUX	Beam width V	Beam width H
2m	3350.85 LUX	0.7m	0.6m
4m	837.71 LUX	1.4m	1.2m
6m	372.32 LUX	2.1m	1.9m
8m	209.43 LUX	2.8m	2.5m
10m	134.03 LUX	3.4m	3.1m
12m	93.08 LUX	4.1m	3.7m

Ver.Spread:19.5 Horiz.Spread:17.6

Landscape / Street pole light
B9CTC0269 @20WQx2

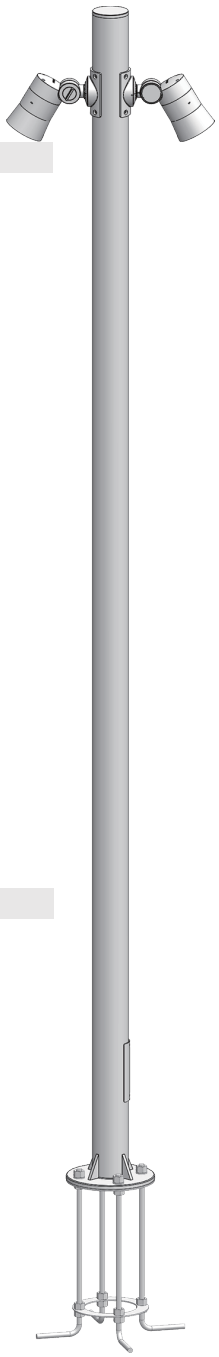

Adjustable Beam Direction

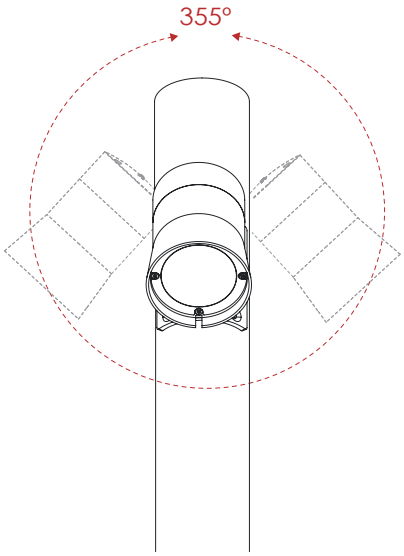

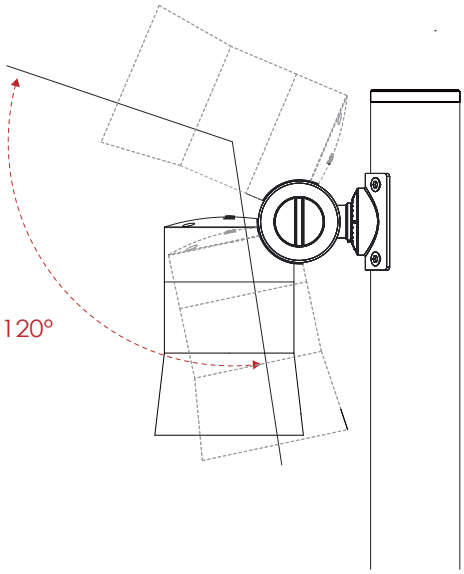

Regular Painting Color

Basic
Sanded Grey
KAL 7042

Secondary
Sanded Black
RAL 9005

Flag Base

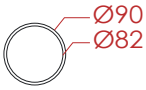

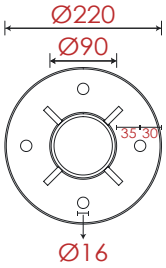

Pole Dimension & Material

Diameter : Ø90mm
Height : 3000mm (Customizeable)
Material : Aluminum

Accessories

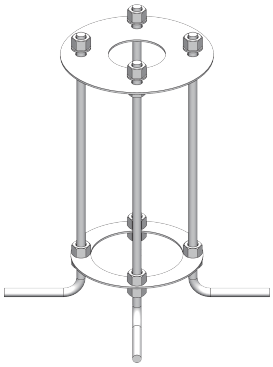

Base Dimension

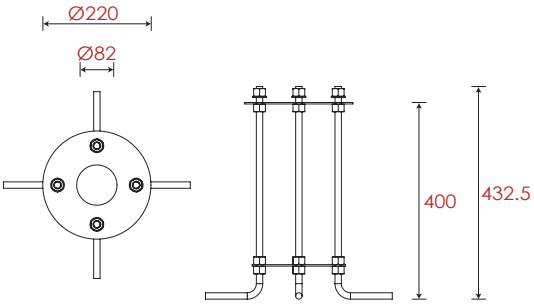

Item	Lens	The manufacturer selected lens degree(°)θ1/2	Input voltage(V)	Typical operating current(mA)	Typical consumption(W)	Typical luminance(lm)	IK rate
B9CTC0269	B76	20°	240	240V=89 × 2	20 × 2	2054 × 2	07

Landscape / Street pole light
B9CTR0169

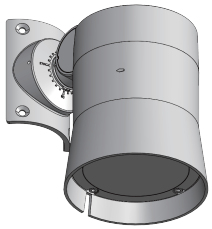

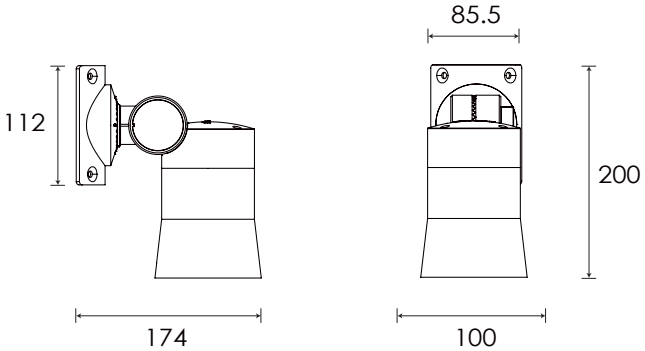

Specification

Housing	12# Die-Casting aluminum finishing or powder painting T=60-80μm.Adhesion of ISO class 1/ASTM class 4B
Light Window	Tempered Glass.T=3mm
Cable Gland	IP68 PG-9 PA66
Gasket	Tooling shaped seal
LED	NICHIA
LED Driver	Constant Voltage Input, Constant Current Output
Power Cable	Outside of luminaire 120V/240V: H05RN-F 3×1.0mm², L=4m
Dimming Support	TRIAC PWM Available 1-10V Dali Customized
Operating Restrict	Temperature of environment between -20˚C~40˚C

Regular Painting Color

Basic

Sanded Grey
KAL 7042

Secondary

Sanded Black
RAL 9005

Lens

Item Code		Referenced Degree(°)θ1/2			
	B76	**15°**	**20°**	**35°**	**50°**

Item	Light Source	Lens	The manufacturer selected lens degree(°)θ1/2	Input voltage(V)	Typical operating current(mA)	Typical consumption(W)	Typical luminance(lm)	IK rate
B9CTR0169	18W	B76	20°	240	240V=89	20	2054	07

Photometric

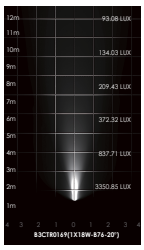

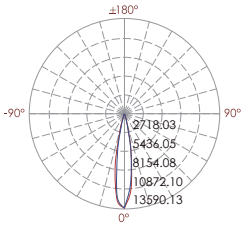

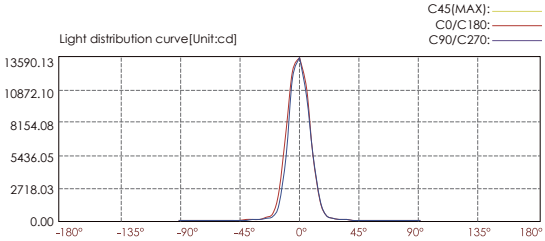

Lux distance curve

Illuminance at a distance

	Center beam LUX	Beam width V	Beam width H
2m	3350.85 LUX	0.7m	0.6m
4m	837.71 LUX	1.4m	1.2m
6m	372.32 LUX	2.1m	1.9m
8m	209.43 LUX	2.8m	2.5m
10m	134.03 LUX	3.4m	3.1m
12m	93.08 LUX	4.1m	3.7m

Ver.Spread:19.5 Horiz.Spread:17.6

Landscape / Street pole light
B9CTC0369 @20Wx3

Adjustable Beam Direction

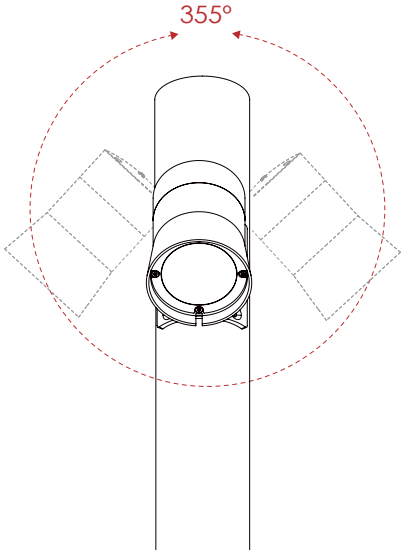

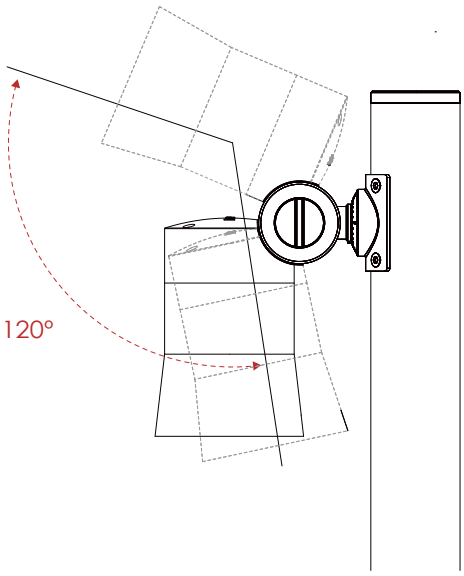

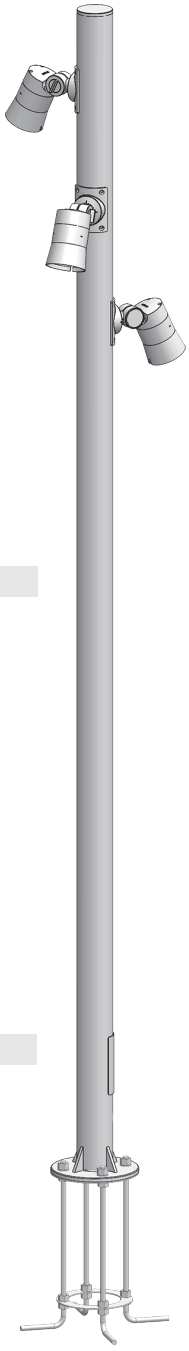

Regular Painting Color

Basic
Sanded Grey
KAL 7042

Secondary
Sanded Black
RAL 9005

Flag Base

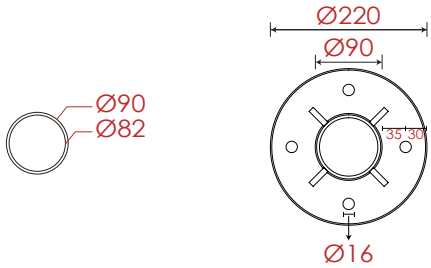

Pole Dimension & Material

Diameter : Ø90mm
Height : 3000mm (Customizeable)
Material : Aluminum

Accessories

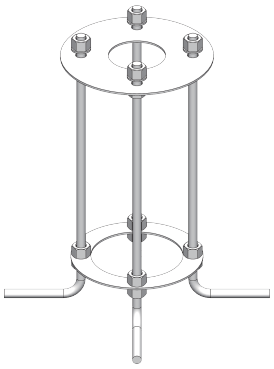

Base Dimension

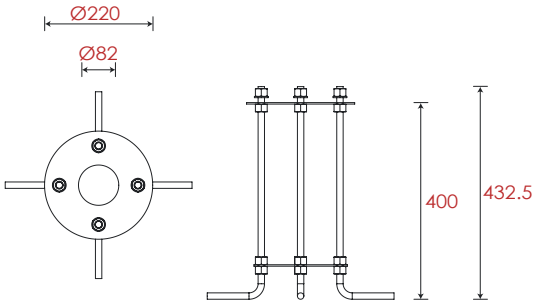

Item	Lens	The manufacturer selected lens degree(°)θ1/2	Input voltage(V)	Typical operating current(mA)	Typical consumption(W)	Typical luminance(lm)	IK rate
B9CTC0369	B76	20°	240	240V=89 × 3	20 × 3	2054 × 3	07

Landscape / Street pole light
B9CTR0169

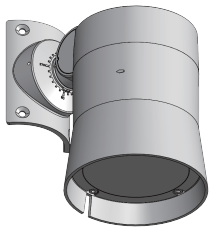

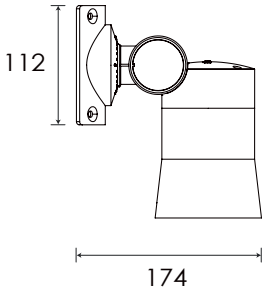

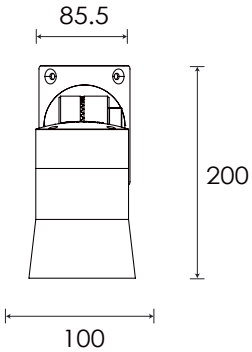

Specification

Housing	12# Die-Casting aluminum finishing or powder painting T=60-80μm.Adhesion of ISO class 1/ASTM class 4B
Light Window	Tempered Glass.T=3mm
Cable Gland	IP68 PG-9 PA66
Gasket	Tooling shaped seal
LED	NICHIA
LED Driver	Constant Voltage Input, Constant Current Output
Power Cable	Outside of luminaire 120V/240V: H05RN-F 3×1.0mm², L=4m
Dimming Support	TRIAC PWM Available 1-10V Dali Customized
Operating Restrict	Temperature of environment between -20˚C~40˚C

Regular Painting Color

Basic

Sanded Grey
KAL 7042

Secondary

Sanded Black
RAL 9005

Lens

Item Code		Referenced Degree(°)θ1/2			
	B76	**15°**	**20°**	**35°**	**50°**

Item	Light Source	Lens	The manufacturer selected lens degree(°)θ1/2	Input voltage(V)	Typical operating current(mA)	Typical consumption(W)	Typical luminance(lm)	IK rate
B9CTR0169	18W	B76	20°	240	240V=89	20	2054	07

Photometric

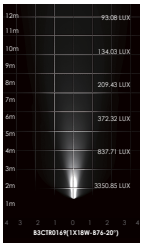

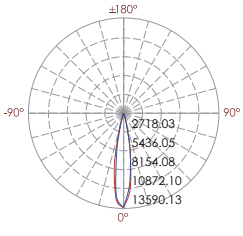

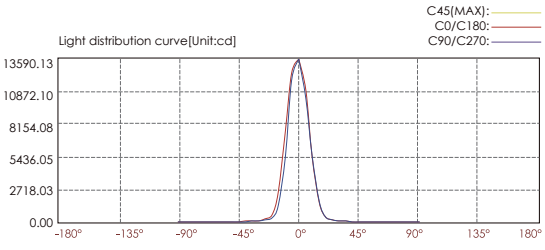

Lux distance curve

Illuminance at a distance

	Center beam LUX	Beam width V	Beam width H
2m	3350.85 LUX	0.7m	0.6m
4m	837.71 LUX	1.4m	1.2m
6m	372.32 LUX	2.1m	1.9m
8m	209.43 LUX	2.8m	2.5m
10m	134.03 LUX	3.4m	3.1m
12m	93.08 LUX	4.1m	3.7m

Ver.Spread:19.5 Horiz.Spread:17.6

Landscape / Street pole light
B9CTC0569 @20W×5

Adjustable Beam Direction

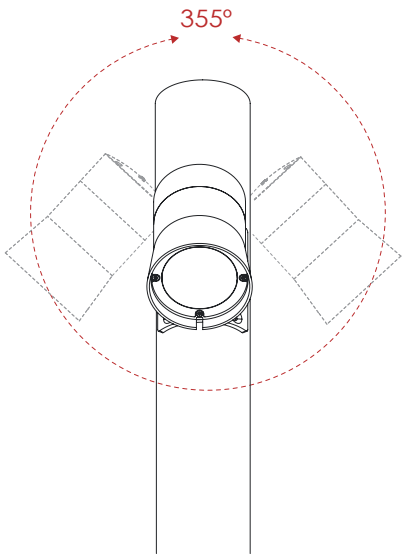

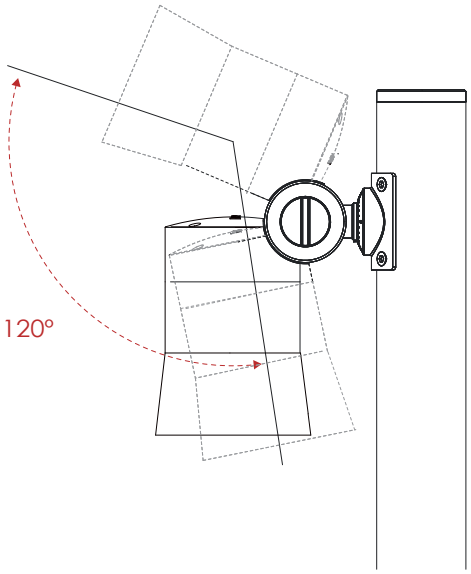

Regular Painting Color

Basic	Secondary
Sanded Grey **KAL 7042**	Sanded Black **RAL 9005**

Flag Base

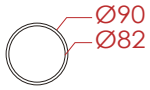

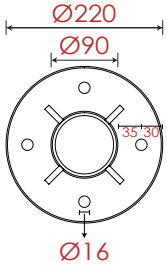

Pole Dimension & Material

Diameter : Ø90mm
Height : 3000mm (Customizeable)
Material : Aluminum

Accessories

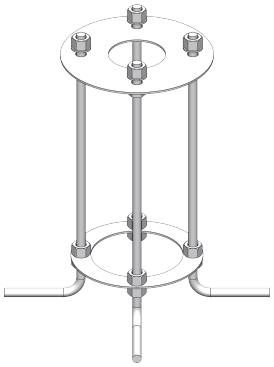

Base Dimension

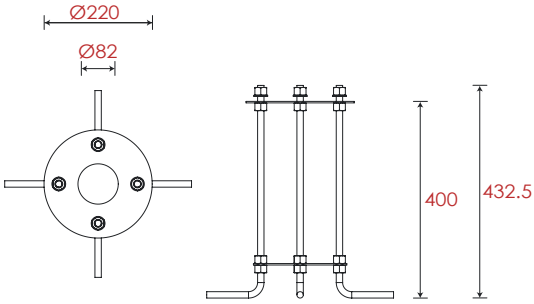

Item	Lens	The manufacturer selected lens degree(°)θ1/2	Input voltage(V)	Typical operating current(mA)	Typical consumption(W)	Typical luminance(lm)	IK rate
B9CTC0569	B76	20°	240	240V=89 × 5	20 × 5	2054 × 5	07

Landscape / Street pole light
B9CTR0169

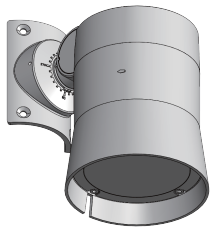

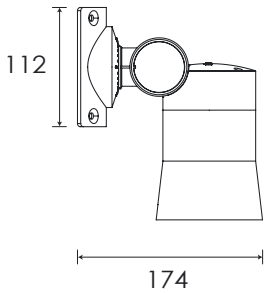

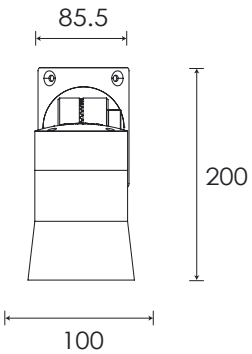

Specification

Housing	12# Die-Casting aluminum finishing or powder painting T=60-80μm.Adhesion of ISO class 1/ASTM class 4B
Light Window	Tempered Glass.T=3mm
Cable Gland	IP68 PG-9 PA66
Gasket	Tooling shaped seal
LED	NICHIA
LED Driver	Constant Voltage Input, Constant Current Output
Power Cable	Outside of luminaire 120V/240V: H05RN-F 3×1.0mm², L=4m
Dimming Support	TRIAC PWM Available 1-10V Dali Customized
Operating Restrict	Temperature of environment between -20˚C~40˚C

Regular Painting Color

Basic

Sanded Grey
KAL 7042

Secondary

Sanded Black
RAL 9005

Lens

Item Code		Referenced Degree(°)θ1/2			
	B76	**15°**	**20°**	**35°**	**50°**

Item	Light Source	Lens	The manufacturer selected lens degree(°)θ1/2	Input voltage(V)	Typical operating current(mA)	Typical consumption(W)	Typical luminance(lm)	IK rate
B9CTR0169	18W	B76	20°	240	240V=89	20	2054	07

Photometric

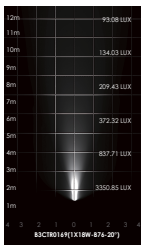

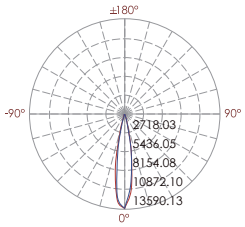

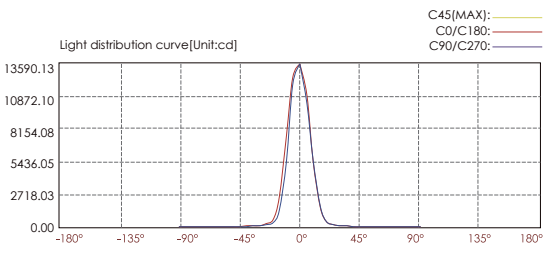

Lux distance curve

Illuminance at a distance

	Center beam LUX	Beam width V	Beam width H
2m	3350.85 LUX	0.7m	0.6m
4m	837.71 LUX	1.4m	1.2m
6m	372.32 LUX	2.1m	1.9m
8m	209.43 LUX	2.8m	2.5m
10m	134.03 LUX	3.4m	3.1m
12m	93.08 LUX	4.1m	3.7m

Ver.Spread:19.5 Horiz.Spread:17.6

Landscape / Street pole light
B9CTR0169

Adjustable Beam Direction

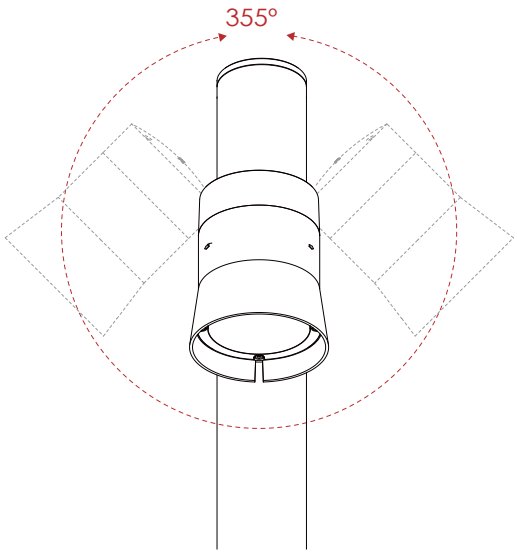

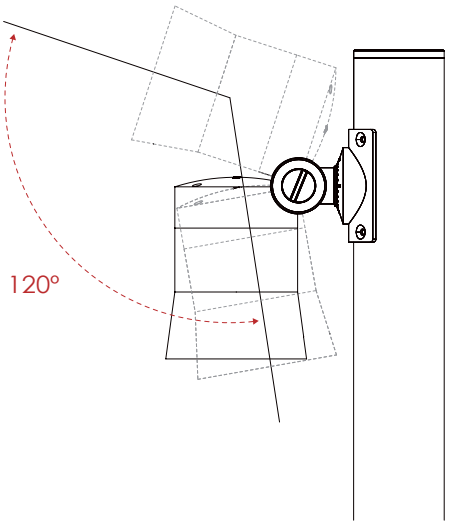

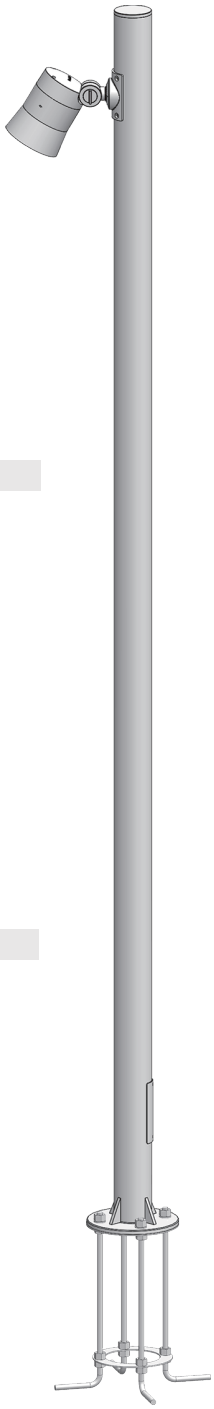

Regular Painting Color

Basic	Secondary
Sanded Grey **KAL 7042**	Sanded Black **RAL 9005**

Flag Base

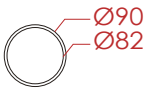

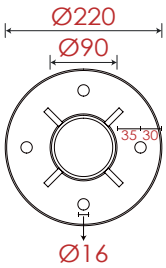

Pole Dimension & Material

Diameter : Ø90mm
Height : 3000mm (Customizeable)
Material : Aluminum

B9CUC0173 @30W

Accessories

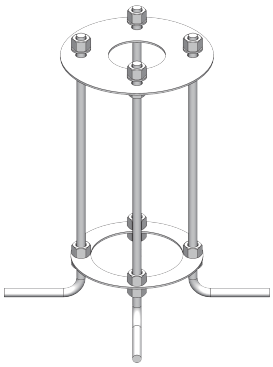

Base Dimension

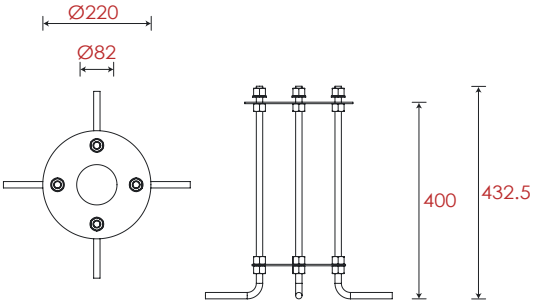

Item	Lens	The manufacturer selected lens degree(°)θ1/2	Input voltage(V)	Typical operating current(mA)	Typical consumption(W)	Typical luminance(lm)	IK rate
B9CUC0173	B57	25°	240	240V=130	30	2886	07

Landscape / Street pole light
B9CUR0173

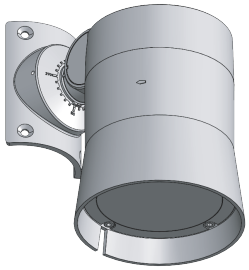

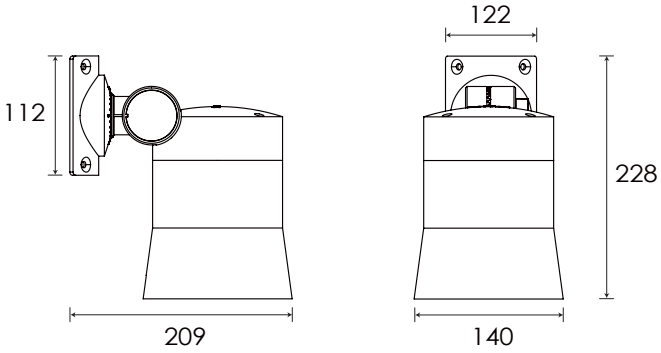

Specification

Housing	12# Die-Casting aluminum finishing or powder painting T=60-80μm.Adhesion of ISO class 1/ASTM class 4B
Light Window	Tempered Glass.T=3mm
Cable Gland	IP68 PG-9 PA66
Gasket	Tooling shaped seal
LED	NICHIA
LED Driver	Constant Voltage Input, Constant Current Output
Power Cable	Outside of luminaire 120V/240V: H05RN-F 3×1.0mm², L=4m
Dimming Support	TRIAC PWM Available 1-10V Dali Customized
Operating Restrict	Temperature of environment between -20˚C~40˚C

Regular Painting Color

Basic

Sanded Grey
KAL 7042

Secondary

Sanded Black
RAL 9005

Lens

Item Code		Referenced Degree(°)θ1/2			
	B57	**15°**	**25°**	**36°**	**60°**

Item	Light Source	Lens	The manufacturer selected lens degree(°)θ1/2	Input voltage(V)	Typical operating current(mA)	Typical consumption(W)	Typical luminance(lm)	IK rate
B9CUR0173	27W	B57	25°	240	240V=130	30	2886	07

Photometric

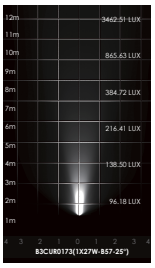

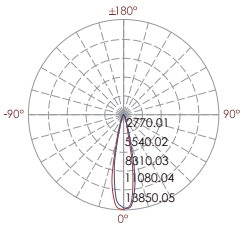

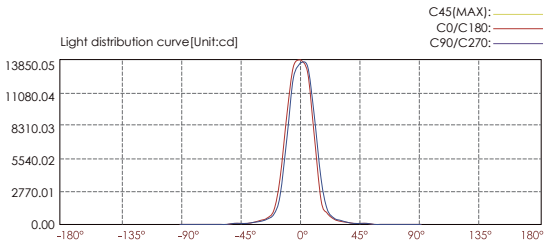

Lux distance curve

Illuminance at a distance

	Center beam LUX	Beam width V	Beam width H
2m	3462.51 LUX	0.8m	0.8m
4m	865.63 LUX	1.6m	1.6m
6m	384.72 LUX	2.5m	2.4m
8m	216.41 LUX	3.3m	3.3m
10m	138.50 LUX	4.1m	4.1m
12m	96.18 LUX	4.9m	4.9m

Ver.Spread:23.3 Horiz.Spread:23

Landscape / Street pole light
B9CUC0273 @30W×2

Adjustable Beam Direction

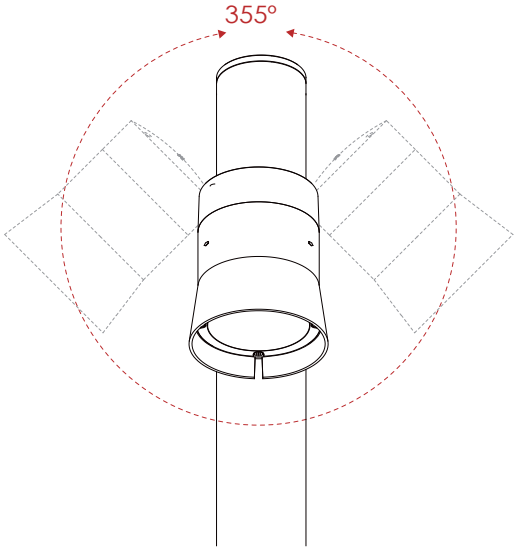

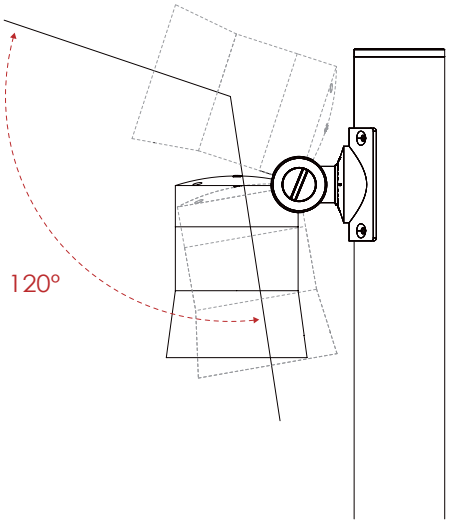

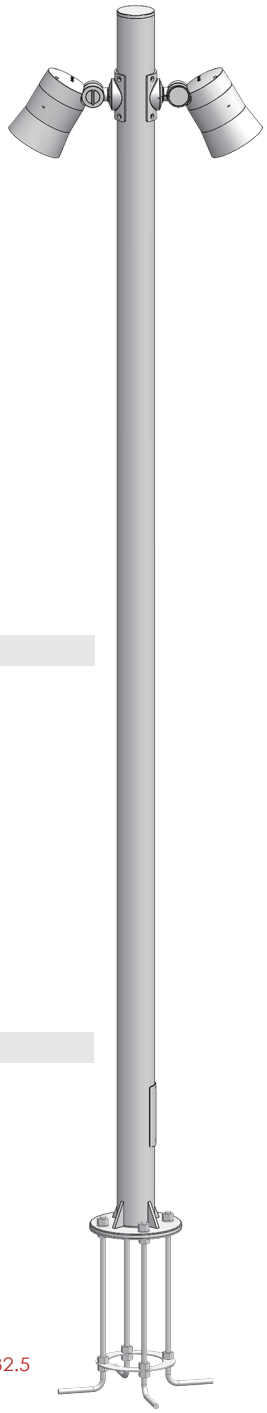

Regular Painting Color

Basic	Secondary
Sanded Grey **KAL 7042**	Sanded Black **RAL 9005**

Flag Base

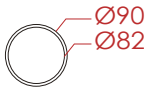

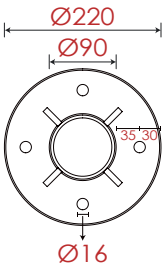

Pole Dimension & Material

Diameter : Ø90mm
Height : 3000mm (Customizeable)
Material : Aluminum

Accessories

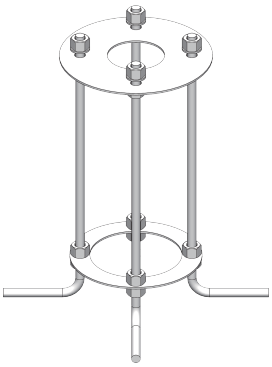

Base Dimension

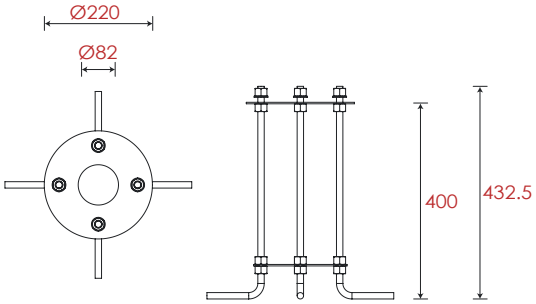

Item	Lens	The manufacturer selected lens degree(°)θ1/2	Input voltage(V)	Typical operating current(mA)	Typical consumption(W)	Typical luminance(lm)	IK rate
B9CUC0273	B57	25°	240	240V=130 × 2	30 × 2	2886 × 2	07

Landscape / Street pole light
B9CUR0173

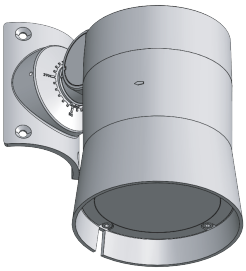

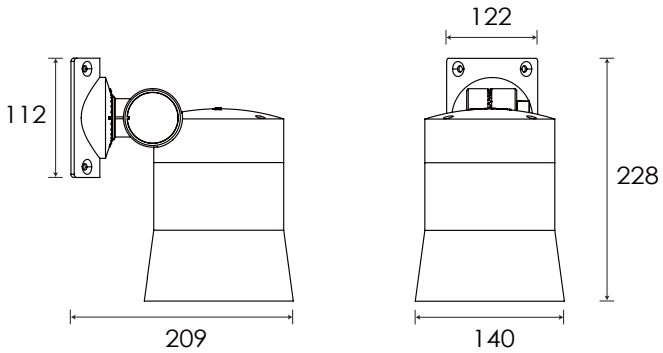

Specification

Housing	12# Die-Casting aluminum finishing or powder painting T=60-80μm.Adhesion of ISO class 1/ASTM class 4B
Light Window	Tempered Glass.T=3mm
Cable Gland	IP68 PG-9 PA66
Gasket	Tooling shaped seal
LED	NICHIA
LED Driver	Constant Voltage Input, Constant Current Output
Power Cable	Outside of luminaire 120V/240V: H05RN-F 3×1.0mm², L=4m
Dimming Support	TRIAC PWM Available 1-10V Dali Customized
Operating Restrict	Temperature of environment between -20˚C~40˚C

Regular Painting Color

Basic

Sanded Grey
KAL 7042

Secondary

Sanded Black
RAL 9005

Lens

Item Code		Referenced Degree(°)θ1/2			
	B57	**15°**	**25°**	**36°**	**60°**

Item	Light Source	Lens	The manufacturer selected lens degree(°)θ1/2	Input voltage(V)	Typical operating current(mA)	Typical consumption(W)	Typical luminance(lm)	IK rate
B9CUR0173	27W	B57	25°	240	240V=130	30	2886	07

Photometric

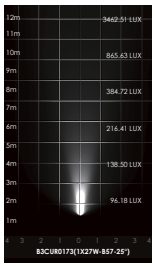

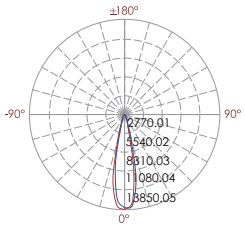

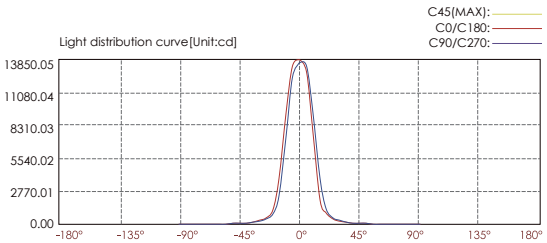

Lux distance curve

Illuminance at a distance

	Center beam LUX	Beam width V	Beam width H
2m	3462.51 LUX	0.8m	0.8m
4m	865.63 LUX	1.6m	1.6m
6m	384.72 LUX	2.5m	2.4m
8m	216.41 LUX	3.3m	3.3m
10m	138.50 LUX	4.1m	4.1m
12m	96.18 LUX	4.9m	4.9m

Ver.Spread:23.3 Horiz.Spread:23

Landscape / Street pole light
B9CUC0373 @30W×3

Adjustable Beam Direction

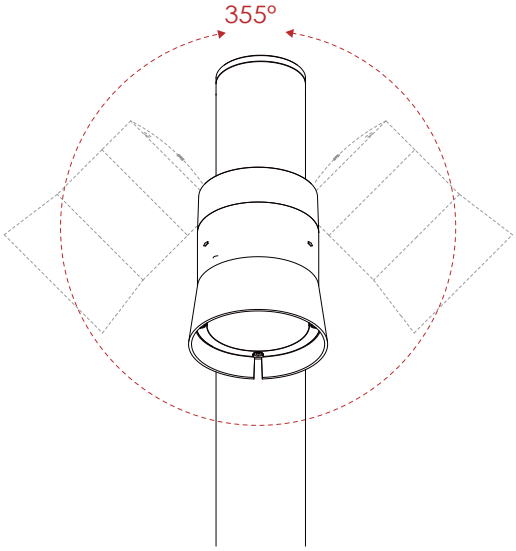

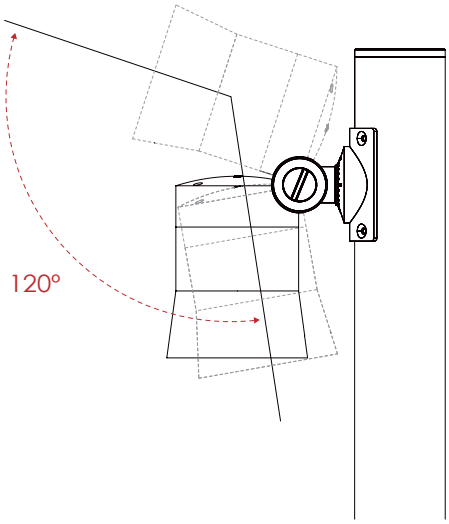

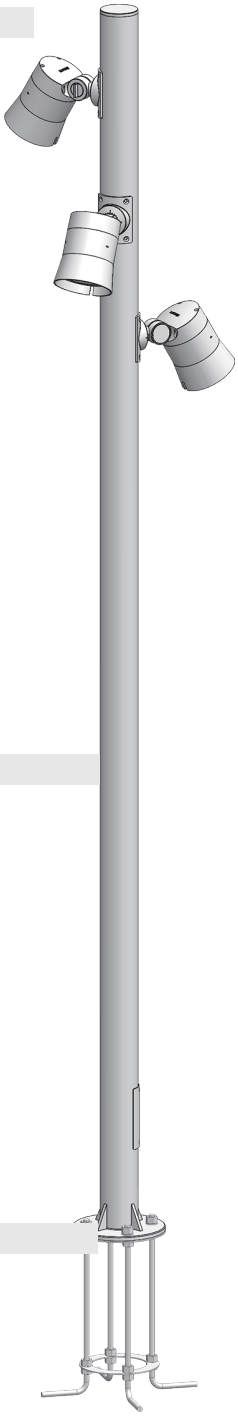

Regular Painting Color

Basic	Secondary
Sanded Grey **KAL 7042**	Sanded Black **RAL 9005**

Flag Base

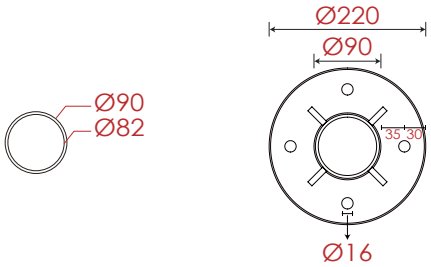

Pole Dimension & Material

Diameter : Ø90mm
Height : 3000mm (Customizeable)
Material : Aluminum

Accessories

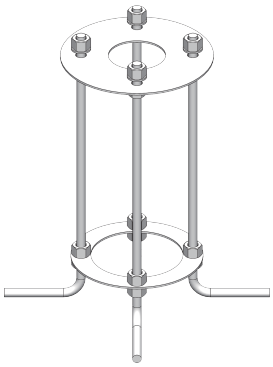

Base Dimension

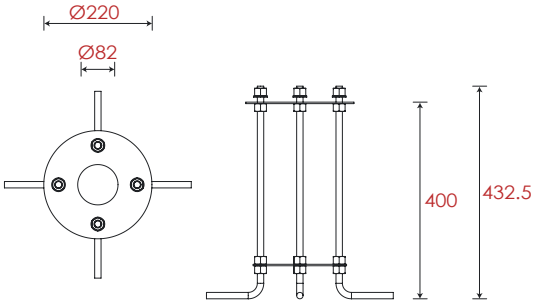

Item	Lens	The manufacturer selected lens degree(°)θ1/2	Input voltage(V)	Typical operating current(mA)	Typical consumption(W)	Typical luminance(lm)	IK rate
B9CUC0373	B57	25°	240	240V=130 × 3	30 × 3	2886 × 3	07

Landscape / Street pole light
B9CUR0173

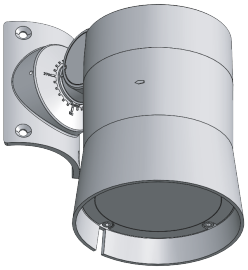

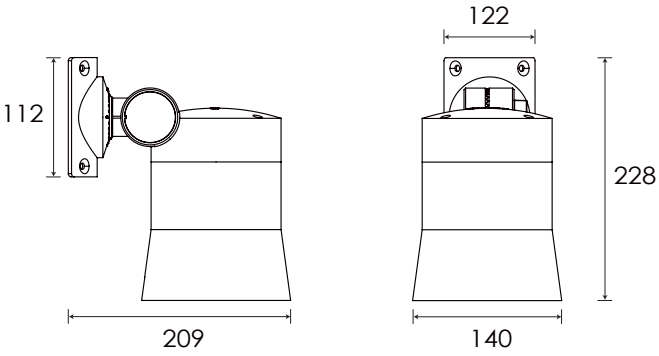

Specification

Housing	12# Die-Casting aluminum finishing or powder painting T=60-80μm.Adhesion of ISO class 1/ASTM class 4B	**LED Driver**	Constant Voltage Input, Constant Current Output
Light Window	Tempered Glass.T=3mm	**Power Cable**	Outside of luminaire 120V/240V: H05RN-F 3×1.0mm², L=4m
Cable Gland	IP68 PG-9 PA66	**Dimming Support**	TRIAC PWM Available 1-10V Dali Customized
Gasket	Tooling shaped seal	**Operating Restrict**	Temperature of environment between -20˚C~40˚C
LED	NICHIA		

Regular Painting Color

Basic

Sanded Grey
KAL 7042

Secondary

Sanded Black
RAL 9005

Lens

Item Code		Referenced Degree(°)θ1/2			
	B57	**15°**	**25°**	**36°**	**60°**

Item	Light Source	Lens	The manufacturer selected lens degree(°)θ1/2	Input voltage(V)	Typical operating current(mA)	Typical consumption(W)	Typical luminance(lm)	IK rate
B9CUR0173	27W	B57	25°	240	240V=130	30	2886	07

Photometric

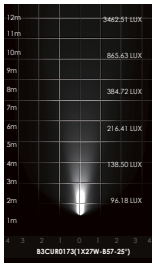

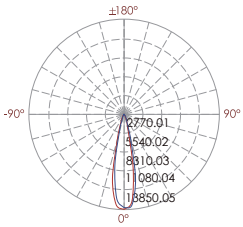

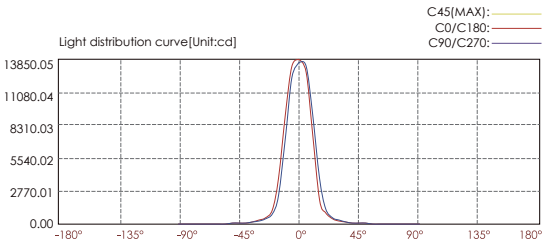

Lux distance curve

Illuminance at a distance

	Center beam LUX	Beam width V	Beam width H
2m	3462.51 LUX	0.8m	0.8m
4m	865.63 LUX	1.6m	1.6m
6m	384.72 LUX	2.5m	2.4m
8m	216.41 LUX	3.3m	3.3m
10m	138.50 LUX	4.1m	4.1m
12m	96.18 LUX	4.9m	4.9m

Ver.Spread:23.3 Horiz.Spread:23

Landscape / Street pole light
B9CUC0573 @30W×5

Adjustable Beam Direction

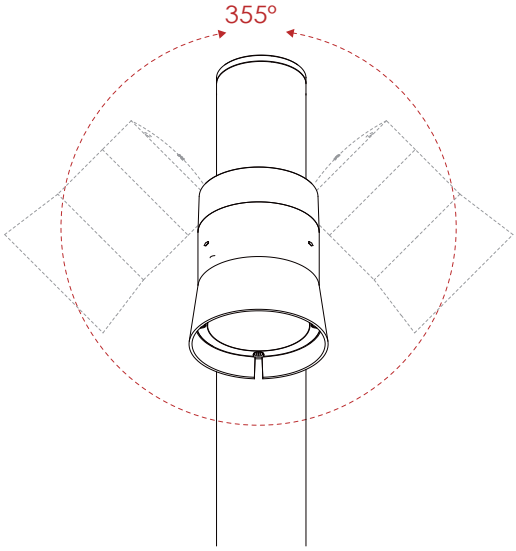

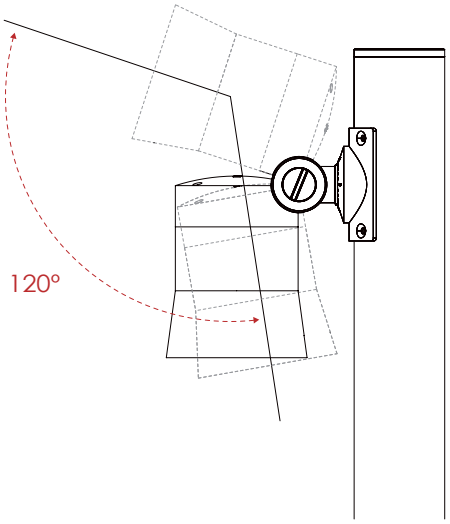

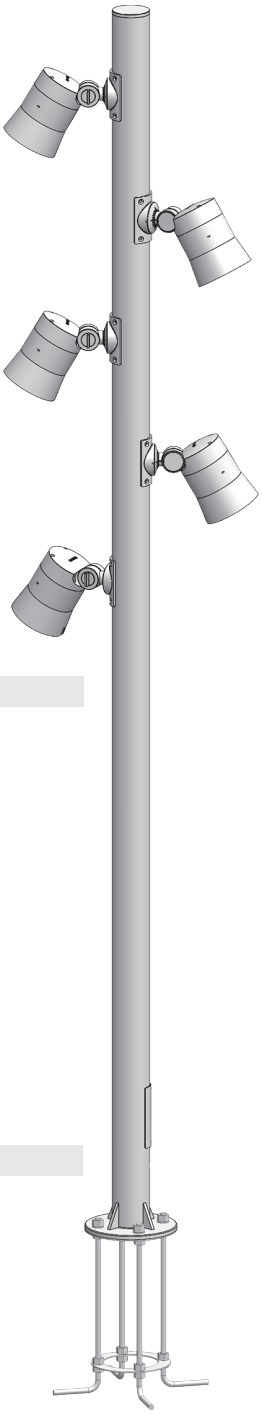

Regular Painting Color

Basic	Secondary
Sanded Grey **KAL 7042**	Sanded Black **RAL 9005**

Flag Base

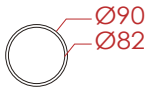

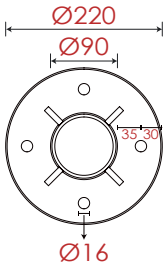

Pole Dimension & Material

Diameter : Ø90mm
Height : 3000mm (Customizeable)
Material : Aluminum

Accessories

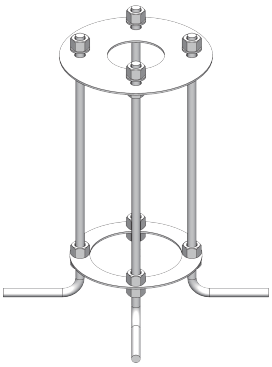

Base Dimension

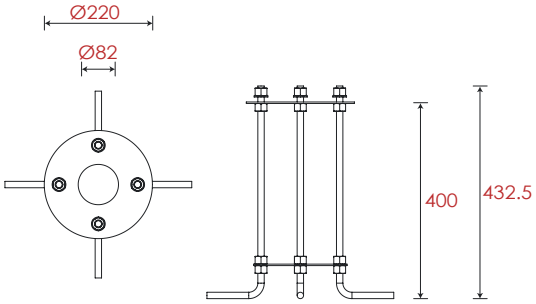

Item	Lens	The manufacturer selected lens degree(°)θ1/2	Input voltage(V)	Typical operating current(mA)	Typical consumption(W)	Typical luminance(lm)	IK rate
B9CUC0573	B57	25°	240	240V=130 × 5	30 × 5	2886 × 5	07

Landscape / Street pole light
B9CUR0173

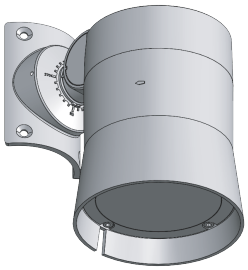

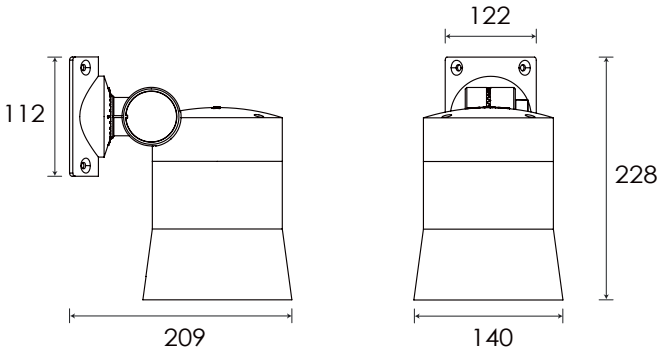

Specification

Housing	12# Die-Casting aluminum finishing or powder painting T=60-80μm.Adhesion of ISO class 1/ASTM class 4B
Light Window	Tempered Glass.T=3mm
Cable Gland	IP68 PG-9 PA66
Gasket	Tooling shaped seal
LED	NICHIA
LED Driver	Constant Voltage Input, Constant Current Output
Power Cable	Outside of luminaire 120V/240V: H05RN-F 3×1.0mm², L=4m
Dimming Support	TRIAC PWM Available 1-10V Dali Customized
Operating Restrict	Temperature of environment between -20˚C~40˚C

Regular Painting Color

Basic

Sanded Grey
KAL 7042

Secondary

Sanded Black
RAL 9005

Lens

Item Code		Referenced Degree(°)θ1/2			
	B57	**15°**	**25°**	**36°**	**60°**

Item	Light Source	Lens	The manufacturer selected lens degree(°)θ1/2	Input voltage(V)	Typical operating current(mA)	Typical consumption(W)	Typical luminance(lm)	IK rate
B9CUR0173	27W	B57	25°	240	240V=130	30	2886	07

Photometric

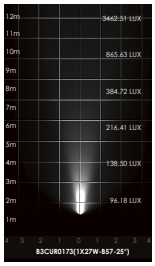

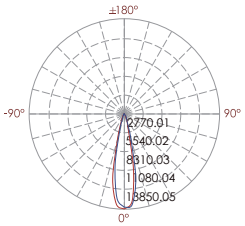

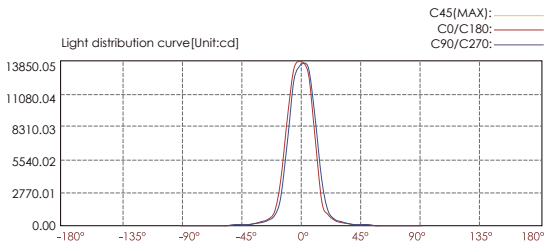

Lux distance curve

Illuminance at a distance	Center beam LUX	Beam width V	Beam width H
2m	3462.51 LUX	0.8m	0.8m
4m	865.63 LUX	1.6m	1.6m
6m	384.72 LUX	2.5m	2.4m
8m	216.41 LUX	3.3m	3.3m
10m	138.50 LUX	4.1m	4.1m
12m	96.18 LUX	4.9m	4.9m

Ver.Spread:23.3 Horiz.Spread:23

Landscape / Street pole light
B9DVC0127 @10W

Adjustable Beam Direction

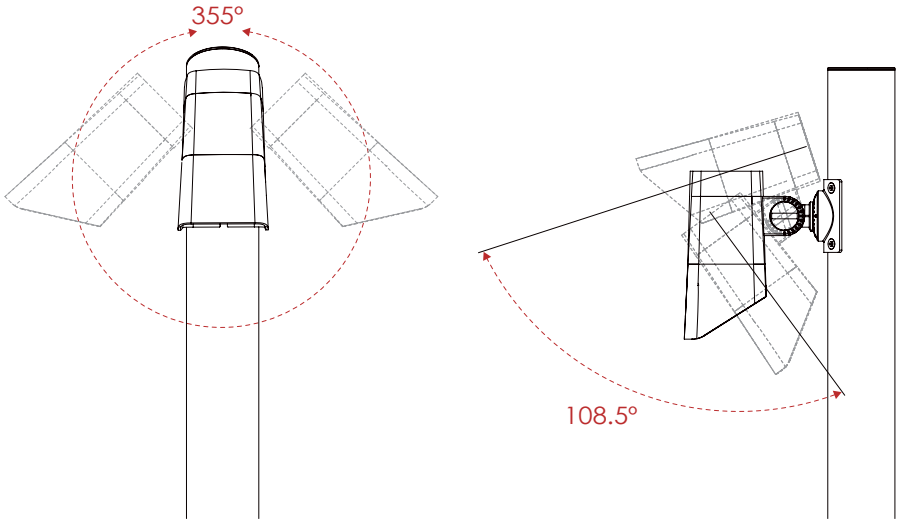

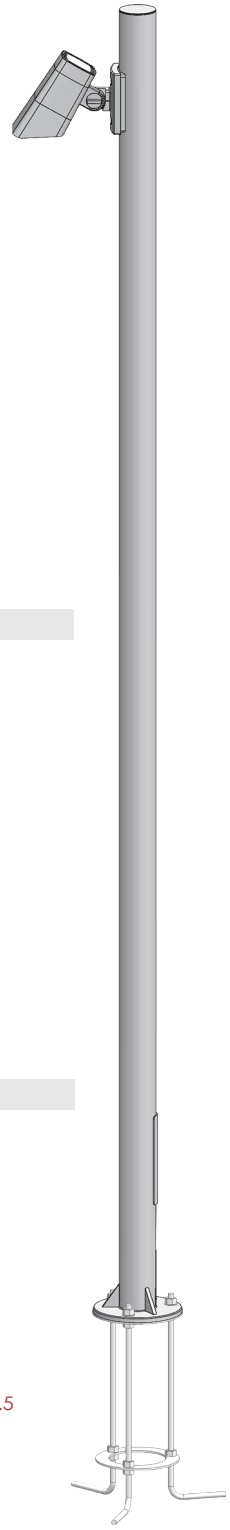

Regular Painting Color

Basic	Secondary
Sanded Grey **KAL 7042**	Sanded Black **RAL 9005**

Flag Base

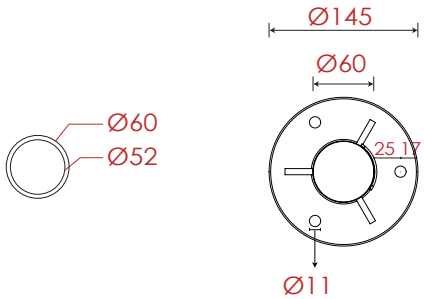

Pole Dimension

Diameter : Ø60mm
Height : 2200mm (Customizeable)
Material : Aluminum

Accessories

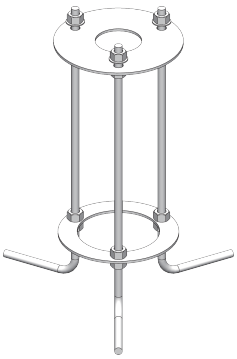

Base Dimension

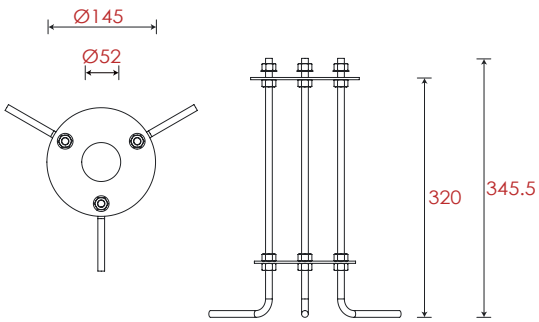

Item	Lens	The manufacturer selected lens degree(°)θ1/2	Input voltage(V)	Typical operating current(mA)	Typical consumption(W)	Typical luminance(lm)	IK rate
B9DVC0127	B71	24°	240	240V=45	10	792	07

Landscape / Street pole light
B9DVQ0127

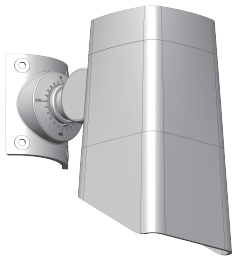

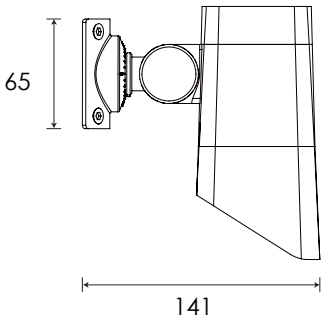

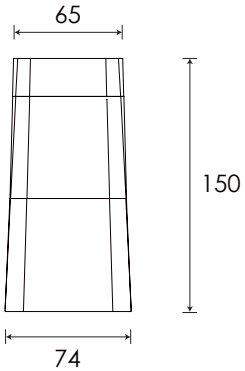

Specification

Housing	12# Die-Casting aluminum finishing or powder painting T=60-80μm.Adhesion of ISO class 1/ASTM class 4B.	**Power Cable**	Outside of luminaire 120V/240V: H05RN-F 3×1.0mm², L=3m
Light Window	Tempered Glass.T=4mm	**Mounting Base**	Powder coated die-casting aluminum
LED Driver	Constant Voltage Input, Constant Current Output	**Dimming Support**	TRIAC PWM Available
LED	NICHIA	**Operating Restrict**	Temperature of environment between -20˚C~40˚C
Lens	Optical lens, efficiency≥85%		

Regular Painting Color

Basic

Sanded Grey
KAL 7042

Secondary

Sanded Black
RAL 9005

Lens

Item Code		Referenced Degree(°)θ1/2				
	B71	**15°**	**24°**	**33°**	**45°**	**60°**

Item	Light Source	Lens	The manufacturer selected lens degree(°)θ1/2	Input voltage(V)	Typical operating current(mA)	Typical consumption(W)	Typical luminance(lm)	IK rate
B9DVQ0127	8W	B71	24°	240	240V=45	10	792	07

Photometric

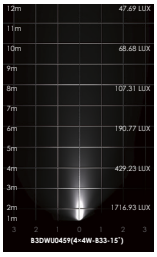

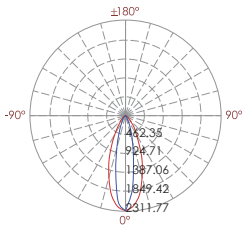

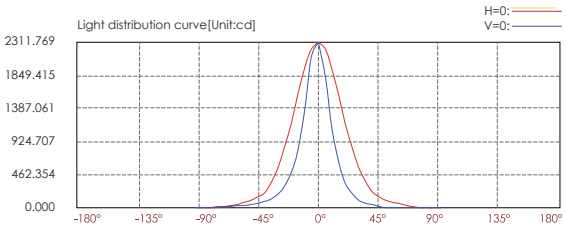

Lux distance cure

Illuminance at a distance

	Center beam LUX	Beam width V	Beam width H
2m	569.36 LUX	1.5m	0.8m
4m	142.34 LUX	2.9m	1.5m
6m	63.26 LUX	4.4m	2.3m
8m	35.58 LUX	5.9m	3.0m
10m	22.77 LUX	7.3m	3.8m
12m	15.82 LUX	8.8m	4.6m

Horiz.Spread:40.3 Vert.Spread:21.5

Landscape / Street pole light
B9DVC0227 @10W×2

Adjustable Beam Direction

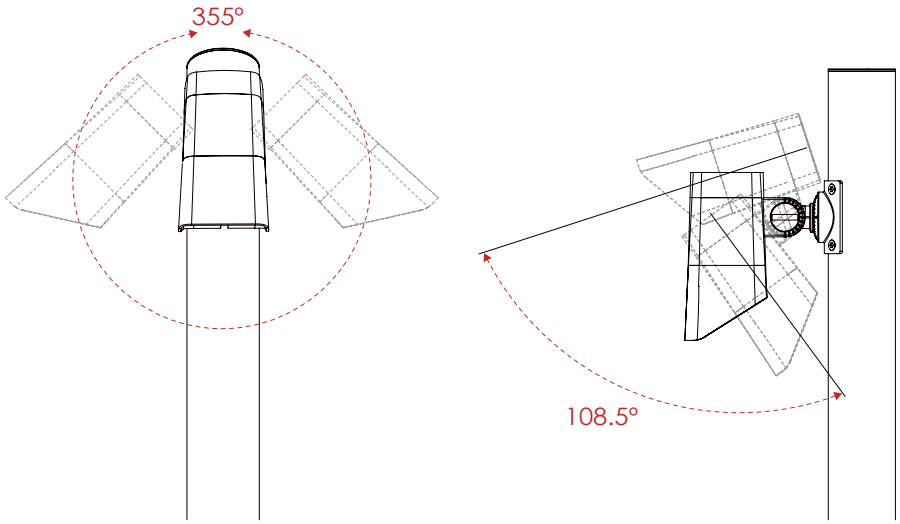

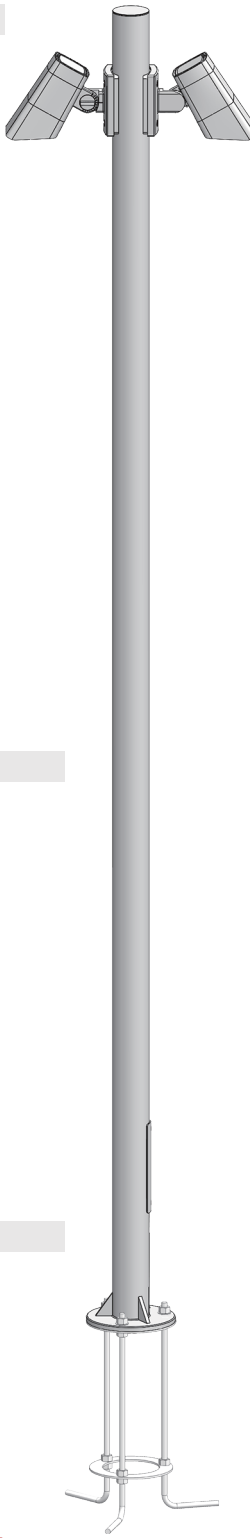

Regular Painting Color

Basic
Sanded Grey
KAL 7042

Secondary
Sanded Black
RAL 9005

Flag Base

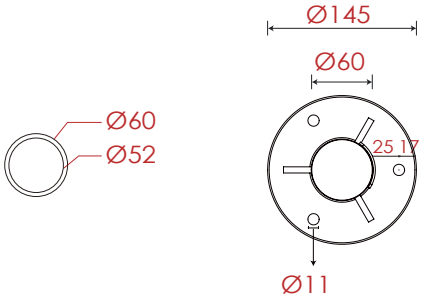

Pole Dimension

Diameter : Ø60mm
Height : 2200mm (Customizeable)
Material : Aluminum

Accessories

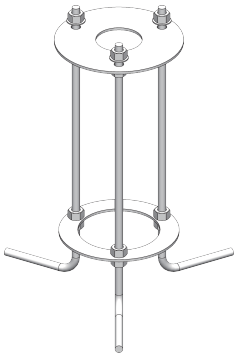

Base Dimension

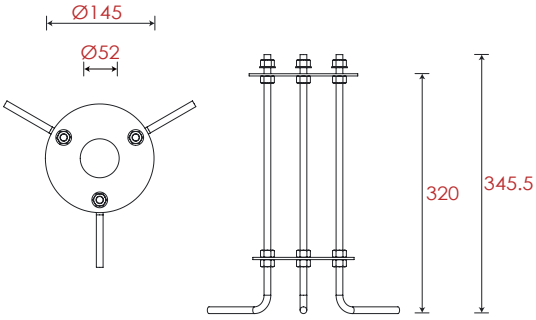

Item	Lens	The manufacturer selected lens degree(°)θ1/2	Input voltage(V)	Typical operating current(mA)	Typical consumption(W)	Typical luminance(lm)	IK rate
B9DVC0227	B71	24°	240	240V=45 × 2	10 × 2	792 × 2	07

Landscape / Street pole light
B9DVQ0127

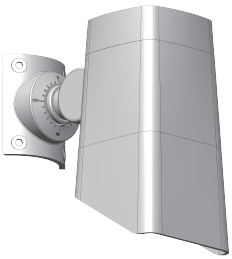

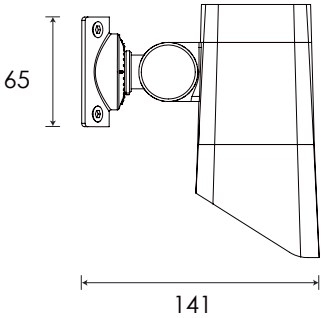

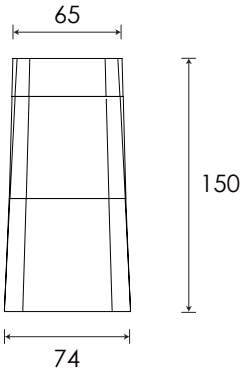

Specification

Housing	12# Die-Casting aluminum finishing or powder painting T=60-80μm.Adhesion of ISO class 1/ASTM class 4B.	**Power Cable**	Outside of luminaire 120V/240V: H05RN-F 3×1.0mm², L=3m
Light Window	Tempered Glass.T=4mm	**Mounting Base**	Powder coated die-casting aluminum
LED Driver	Constant Voltage Input, Constant Current Output	**Dimming Support**	TRIAC PWM Available
LED	NICHIA	**Operating Restrict**	Temperature of environment between -20˚C~40˚C
Lens	Optical lens, efficiency≥85%		

Regular Painting Color

Basic

Sanded Grey
KAL 7042

Secondary

Sanded Black
RAL 9005

Lens

Item Code		Referenced Degree(°)θ1/2				
	B71	**15°**	**24°**	**33°**	**45°**	**60°**

Item	Light Source	Lens	The manufacturer selected lens degree(°)θ1/2	Input voltage(V)	Typical operating current(mA)	Typical consumption(W)	Typical luminance(lm)	IK rate
B9DVQ0127	8W	B71	24°	240	240V=45	10	792	07

Photometric

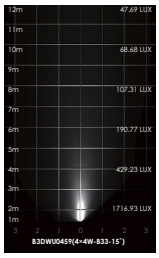

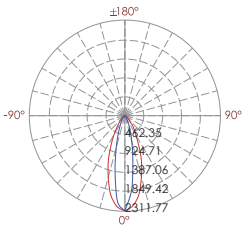

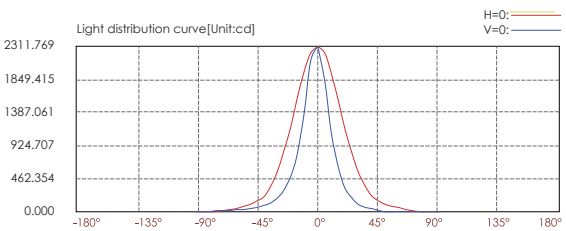

Lux distance cure

Illuminance at a distance

	Center beam LUX	Beam width V	Beam width H
2m	569.36 LUX	1.5m	0.8m
4m	142.34 LUX	2.9m	1.5m
6m	63.26 LUX	4.4m	2.3m
8m	35.58 LUX	5.9m	3.0m
10m	22.77 LUX	7.3m	3.8m
12m	15.82 LUX	8.8m	4.6m

Horiz.Spread:40.3 Vert.Spread:21.5

Landscape / Street pole light
B9DVC0327 @10W×3

Adjustable Beam Direction

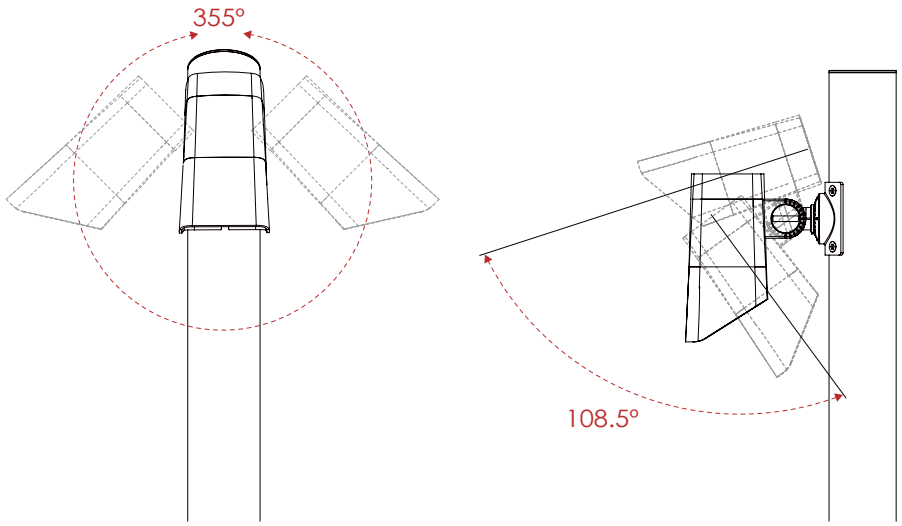

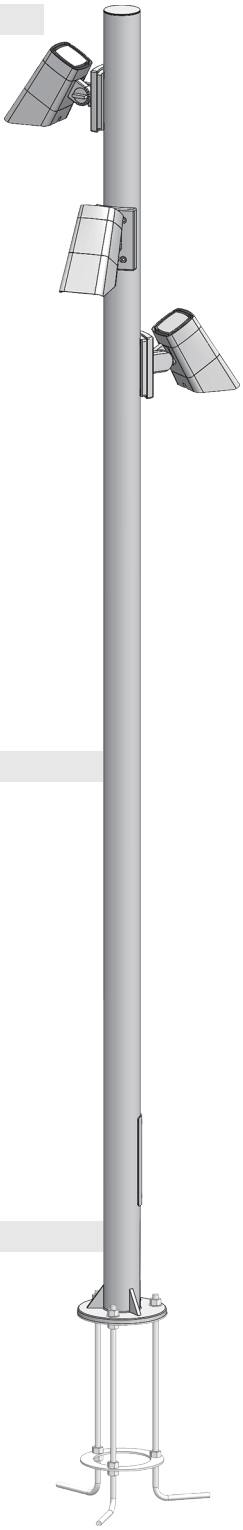

Regular Painting Color

Basic
Sanded Grey
KAL 7042

Secondary
Sanded Black
RAL 9005

Flag Base

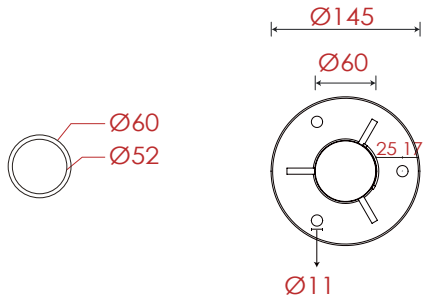

Pole Dimension

Diameter : Ø60mm
Height : 2200mm (Customizeable)
Material : Aluminum

Accessories

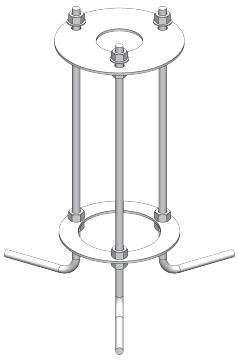

Base Dimension

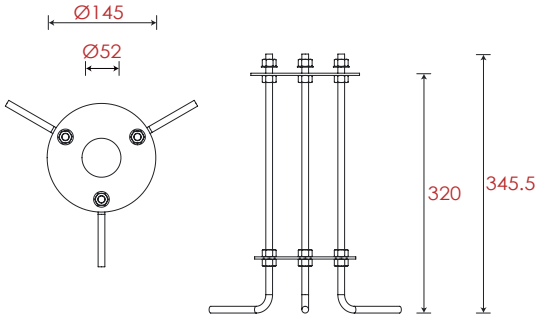

Item	Lens	The manufacturer selected lens degree(°)θ1/2	Input voltage(V)	Typical operating current(mA)	Typical consumption(W)	Typical luminance(lm)	IK rate
B9DVC0327	B71	24°	240	240V=45 ×3	10 × 3	792 × 3	07

Landscape / Street pole light
B9DVQ0127

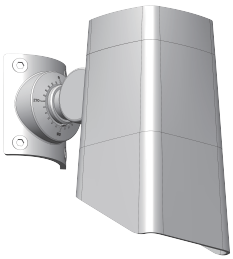

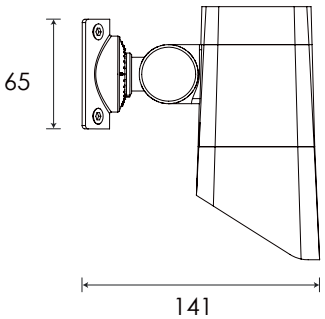

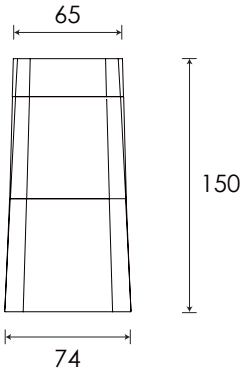

Specification

Housing	12# Die-Casting aluminum finishing or powder painting T=60-80μm.Adhesion of ISO class 1/ASTM class 4B.	**Power Cable**	Outside of luminaire 120V/240V: H05RN-F 3×1.0mm², L=3m
Light Window	Tempered Glass.T=4mm	**Mounting Base**	Powder coated die-casting aluminum
LED Driver	Constant Voltage Input, Constant Current Output	**Dimming Support**	TRIAC PWM Available
LED	NICHIA	**Operating Restrict**	Temperature of environment between -20˚C~40˚C
Lens	Optical lens, efficiency≥85%		

Regular Painting Color

Basic

Sanded Grey
KAL 7042

Secondary

Sanded Black
RAL 9005

Lens

Item Code		Referenced Degree(°)θ1/2				
	B71	**15°**	**24°**	**33°**	**45°**	**60°**

Item	Light Source	Lens	The manufacturer selected lens degree(°)θ1/2	Input voltage(V)	Typical operating current(mA)	Typical consumption(W)	Typical luminance(lm)	IK rate
B9DVQ0127	8W	B71	24°	240	240V=45	10	792	07

Photometric

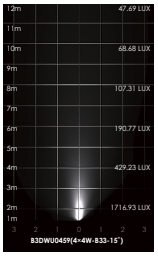

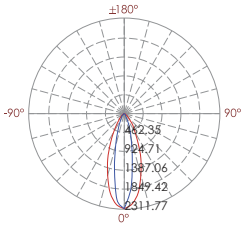

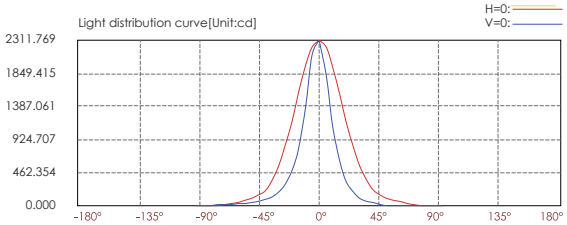

Lux distance cure

Illuminance at a distance

	Center beam LUX	Beam width V	Beam width H
2m	569.36 LUX	1.5m	0.8m
4m	142.34 LUX	2.9m	1.5m
6m	63.26 LUX	4.4m	2.3m
8m	35.58 LUX	5.9m	3.0m
10m	22.77 LUX	7.3m	3.8m
12m	15.82 LUX	8.8m	4.6m

Horiz.Spread:40.3 Vert.Spread:21.5

Landscape / Street pole light
B9DVC0527 @10W×5

Adjustable Beam Direction

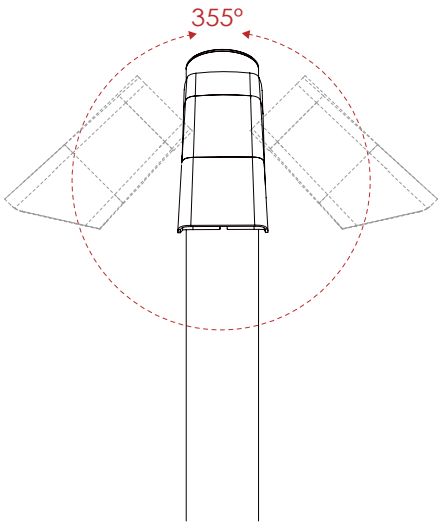

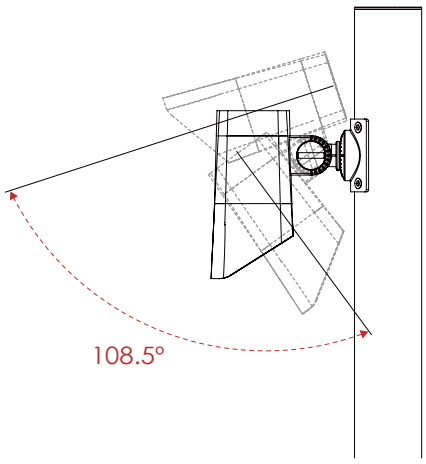

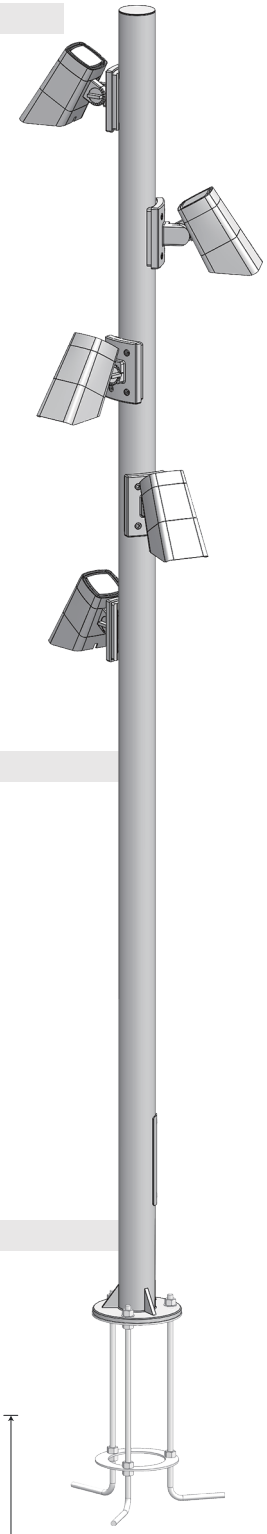

Regular Painting Color

Basic	Secondary
Sanded Grey **KAL 7042**	Sanded Black **RAL 9005**

Flag Base

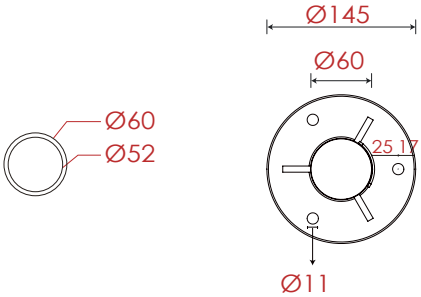

Pole Dimension

Diameter : Ø60mm
Height : 2200mm (Customizeable)
Material : Aluminum

Accessories

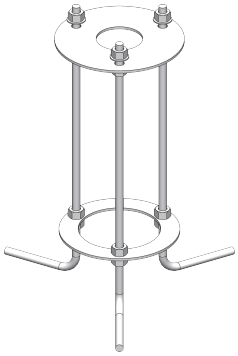

Base Dimension

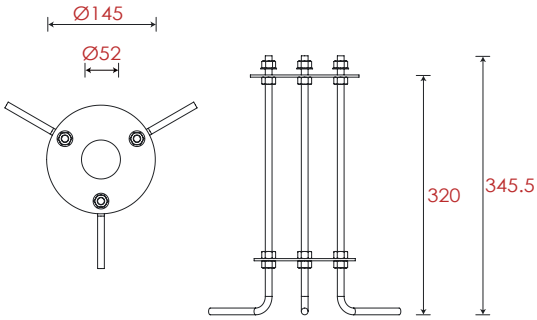

Item	Lens	The manufacturer selected lens degree(°)θ1/2	Input voltage(V)	Typical operating current(mA)	Typical consumption(W)	Typical luminance(lm)	IK rate
B9DVC0527	B71	24°	240	240V=45 × 5	10 × 5	792 × 5	07

Landscape / Street pole light
B9DVQ0127

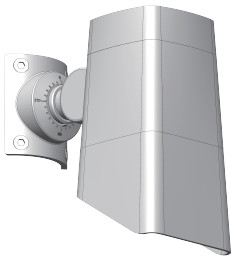

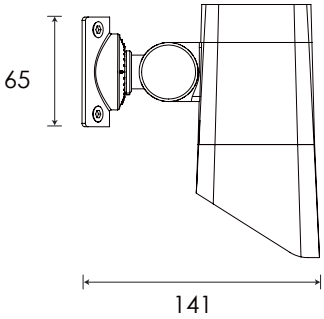

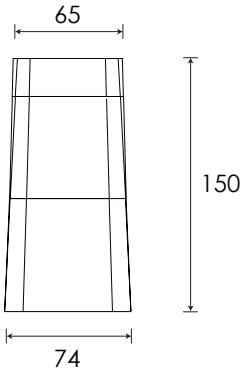

Specification

Housing	12# Die-Casting aluminum finishing or powder painting T=60-80μm.Adhesion of ISO class 1/ASTM class 4B.	**Power Cable**	Outside of luminaire 120V/240V: H05RN-F 3×1.0mm², L=3m
Light Window	Tempered Glass.T=4mm	**Mounting Base**	Powder coated die-casting aluminum
LED Driver	Constant Voltage Input, Constant Current Output	**Dimming Support**	TRIAC PWM Available
LED	NICHIA	**Operating Restrict**	Temperature of environment between -20˚C~40˚C
Lens	Optical lens, efficiency≥85%		

Regular Painting Color

Basic

Sanded Grey
KAL 7042

Secondary

Sanded Black
RAL 9005

Lens

Item Code		Referenced Degree(°)θ1/2				
	B71	**15°**	**24°**	**33°**	**45°**	**60°**

Item	Light Source	Lens	The manufacturer selected lens degree(°)θ1/2	Input voltage(V)	Typical operating current(mA)	Typical consumption(W)	Typical luminance(lm)	IK rate
B9DVQ0127	8W	B71	24°	240	240V=45	10	792	07

Photometric

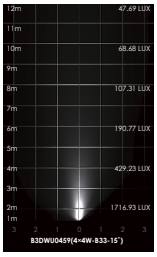

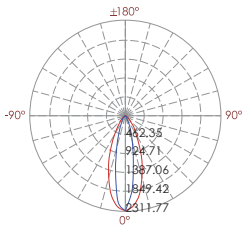

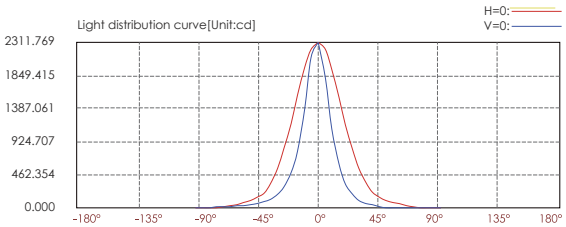

Lux distance cure

Illuminance at a distance

	Center beam LUX	Beam width V	Beam width H
2m	569.36 LUX	1.5m	0.8m
4m	142.34 LUX	2.9m	1.5m
6m	63.26 LUX	4.4m	2.3m
8m	35.58 LUX	5.9m	3.0m
10m	22.77 LUX	7.3m	3.8m
12m	15.82 LUX	8.8m	4.6m

Horiz.Spread:40.3 Vert.Spread:21.5

Landscape / Street pole light
B9DW-1-1 @17.4W

Adjustable Beam Direction

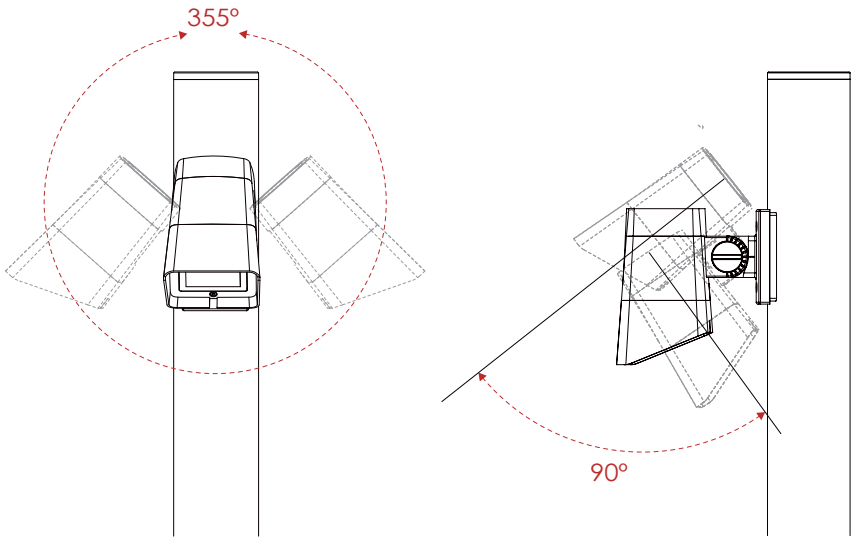

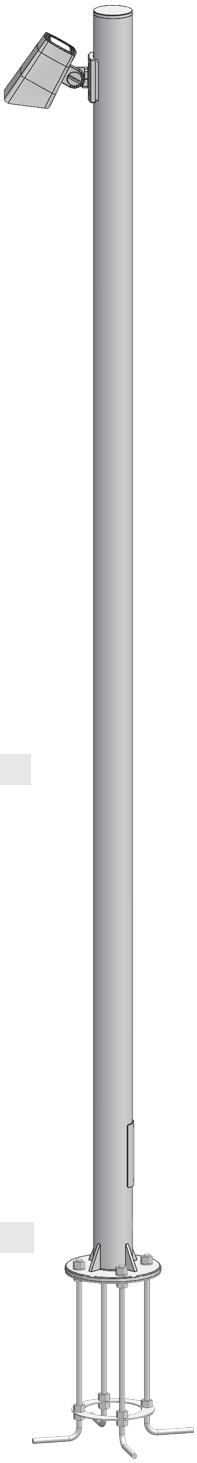

Regular Painting Color

Basic
Sanded Grey
KAL 7042

Secondary
Sanded Black
RAL 9005

Flag Base

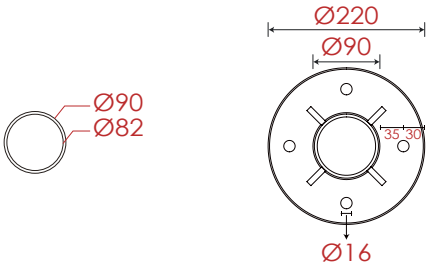

Pole Dimension & Material

Diameter : Ø90mm
Height : 3000mm (Customizeable)
Material : Aluminum

Accessories

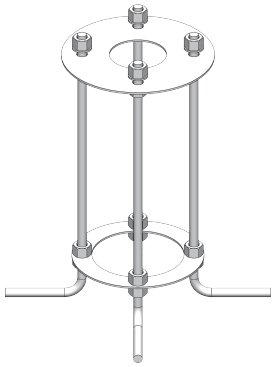

Base Dimension

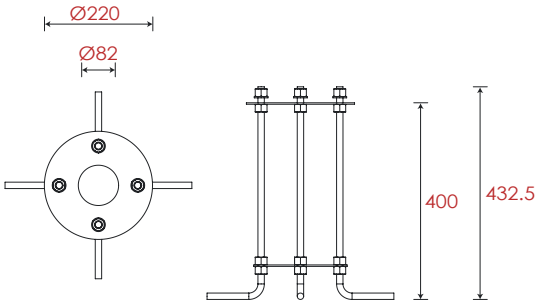

Item	Lens	The manufacturer selected lens degree(°)θ1/2	Input voltage(V)	Typical operating current(mA)	Typical consumption(W)	Typical luminance(lm)	IK rate
B9DW-1-1	FB11B4	20°	120 / 240	120V=142 240V=78	17.4	1227	07

Landscape / Street pole light
B9DWQ0460

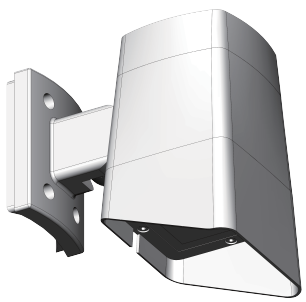

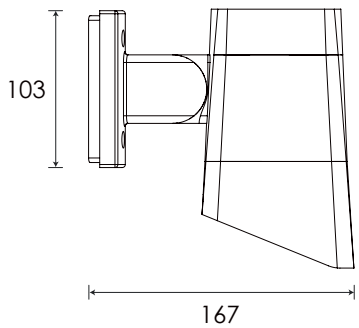

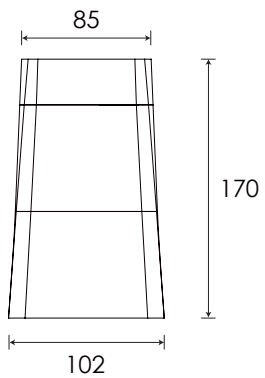

Specification

Housing	12# Die-Casting aluminum finishing or powder painting T=60-80μm.Adhesion of ISO class 1/ASTM class 4B.	**Power Cable**	Outside of luminaire 120V/240V: H05RN-F 3×1.0mm², L=4m
Light Window	Tempered Glass.T=4mm	**Mounting Base**	Powder coated die-casting aluminum
LED Driver	Constant Voltage Input, Constant Current Output	**Dimming Support**	TRIAC PWM Available
LED	NICHIA	**Operating Restrict**	Temperature of environment between -20˚C~40˚C
Lens	Optical lens, efficiency≥85%		

Regular Painting Color

Basic

Sanded Grey
KAL 7042

Secondary

Sanded Black
RAL 9005

Lens

Item Code		Referenced Degree(°)θ1/2					
	FB11B4	**9°**	**15°**	**20°**	**30°**	**45°**	**60°**

Item	Light Source	Lens	The manufacturer selected lens degree(°)θ1/2	Input voltage(V)	Typical operating current(mA)	Typical consumption(W)	Typical luminance(lm)	IK rate
B9DWQ0460	4 × 4W	FB11B4	20°	120 / 240	120V=142 240V=78	17.4	1227	07

Photometric

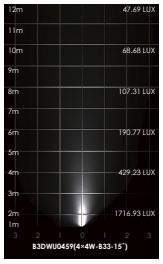

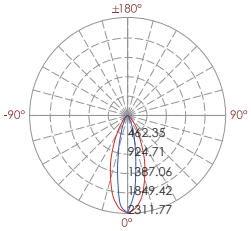

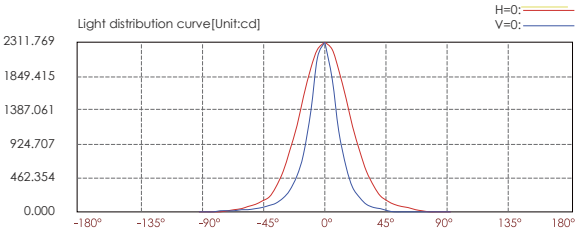

Lux distance cure

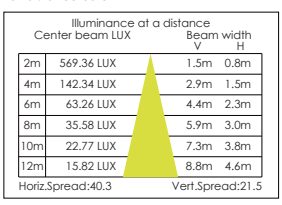

Illuminance at a distance		Beam width V	Beam width H
2m	569.36 LUX	1.5m	0.8m
4m	142.34 LUX	2.9m	1.5m
6m	63.26 LUX	4.4m	2.3m
8m	35.58 LUX	5.9m	3.0m
10m	22.77 LUX	7.3m	3.8m
12m	15.82 LUX	8.8m	4.6m

Horiz.Spread:40.3 Vert.Spread:21.5

Landscape / Street pole light
B9DW-2-1@17.4W×2

Adjustable Beam Direction

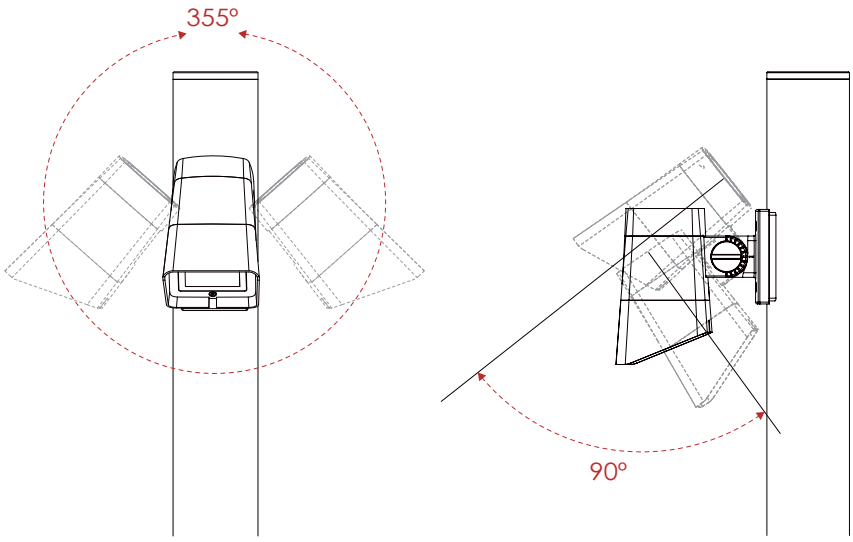

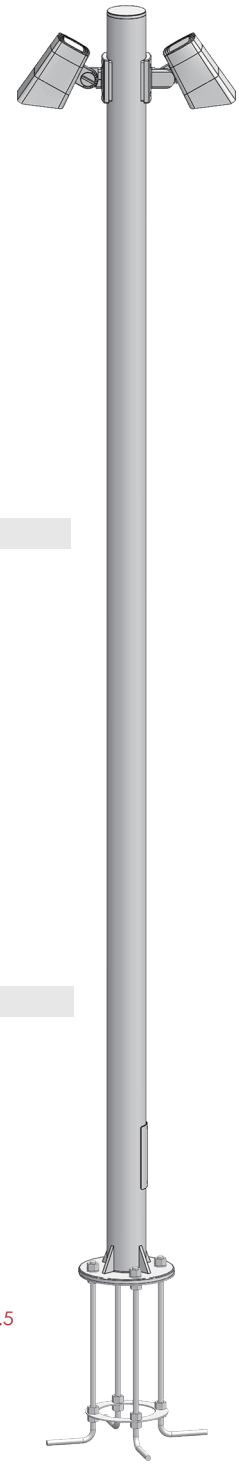

Regular Painting Color

Basic	Secondary
Sanded Grey **KAL 7042**	Sanded Black **RAL 9005**

Flag Base

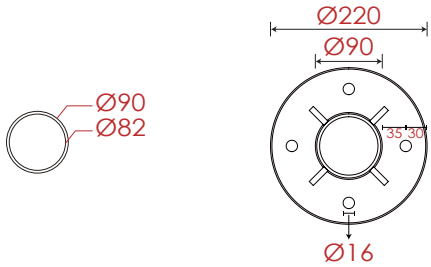

Pole Dimension & Material

Diameter : Ø90mm
Height : 3000mm (Customizeable)
Material : Aluminum

Accessories

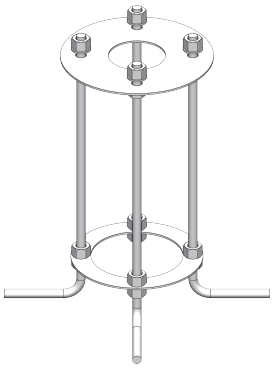

Base Dimension

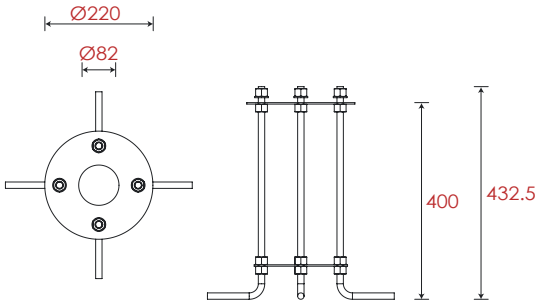

Item	Lens	The manufacturer selected lens degree(°)θ1/2	Input voltage(V)	Typical operating current(mA)	Typical consumption(W)	Typical luminance(lm)	IK rate
B9DW-2-1	FB11B4	20°	120 / 240	120V=142 × 2 240V=78 × 2	17.4 × 2	1227 × 2	07

Landscape / Street pole light
B9DWQ0460

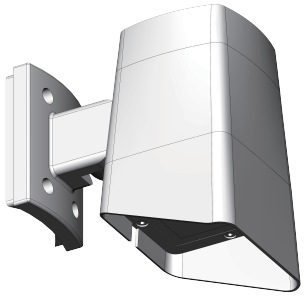

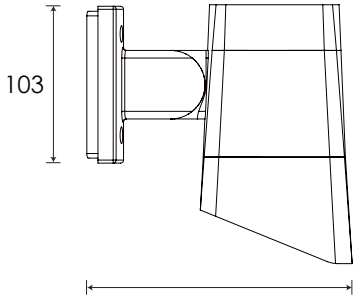

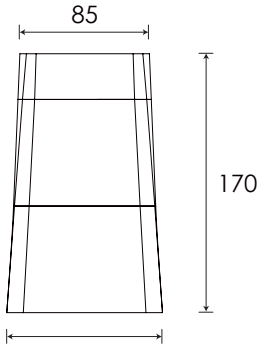

Specification

Housing	12# Die-Casting aluminum finishing or powder painting T=60-80μm.Adhesion of ISO class 1/ASTM class 4B.	**Power Cable**	Outside of luminaire 120V/240V: H05RN-F 3×1.0mm², L=4m
Light Window	Tempered Glass.T=4mm	**Mounting Base**	Powder coated die-casting aluminum
LED Driver	Constant Voltage Input, Constant Current Output	**Dimming Support**	TRIAC PWM Available
LED	NICHIA	**Operating Restrict**	Temperature of environment between -20˚C~40˚C
Lens	Optical lens, efficiency≥85%		

Regular Painting Color

Basic

Sanded Grey
KAL 7042

Secondary

Sanded Black
RAL 9005

Lens

Item Code		Referenced Degree(°)θ1/2					
	FB11B4	**9°**	**15°**	**20°**	**30°**	**45°**	**60°**

Item	Light Source	Lens	The manufacturer selected lens degree(°)θ1/2	Input voltage(V)	Typical operating current(mA)	Typical consumption(W)	Typical luminance(lm)	IK rate
B9DWQ0460	4 × 4W	FB11B4	20°	120 / 240	120V=142 240V=78	17.4	1227	07

Photometric

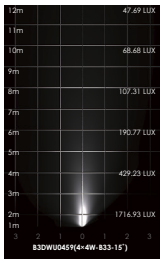

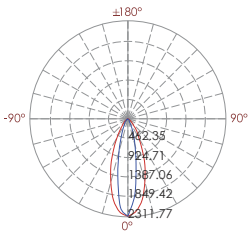

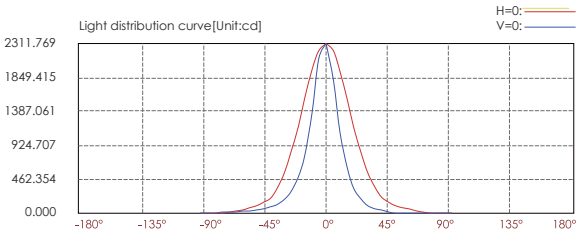

Lux distance cure

Illuminance at a distance

	Center beam LUX	Beam width V	Beam width H
2m	569.36 LUX	1.5m	0.8m
4m	142.34 LUX	2.9m	1.5m
6m	63.26 LUX	4.4m	2.3m
8m	35.58 LUX	5.9m	3.0m
10m	22.77 LUX	7.3m	3.8m
12m	15.82 LUX	8.8m	4.6m

Horiz.Spread:40.3 Vert.Spread:21.5

Landscape / Street pole light
B9DW-3-1 @17.4W×3

Adjustable Beam Direction

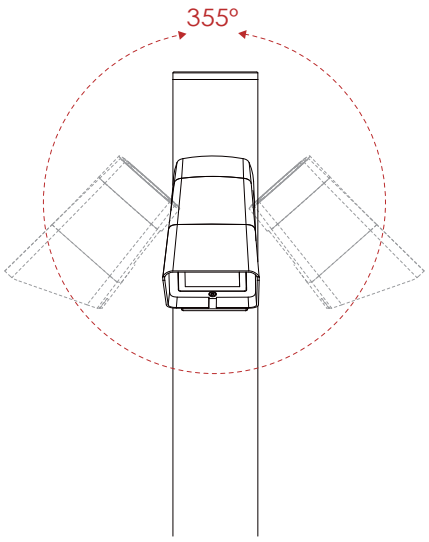

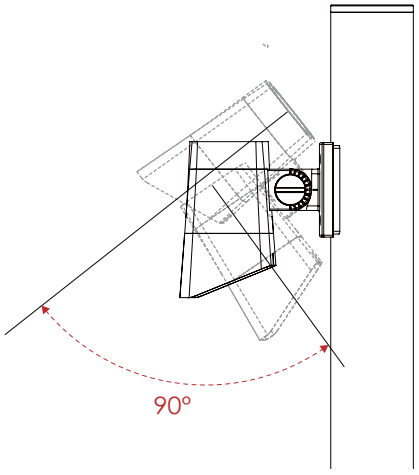

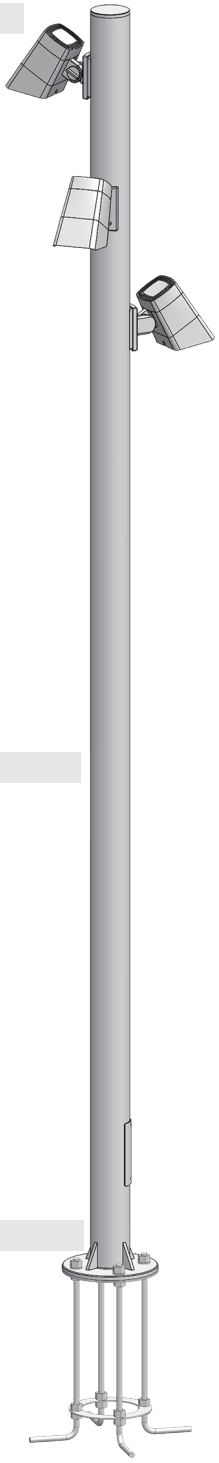

Regular Painting Color

Basic	Secondary
Sanded Grey **KAL 7042**	Sanded Black **RAL 9005**

Flag Base

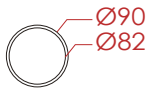

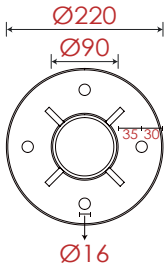

Pole Dimension & Material

Diameter : Ø90mm
Height : 3000mm (Customizeable)
Material : Aluminum

Accessories

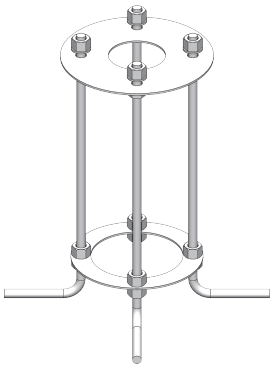

Base Dimension

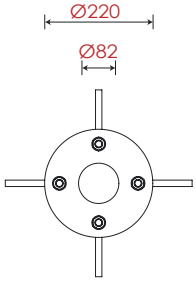

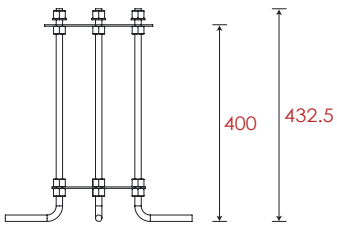

Item	Lens	The manufacturer selected lens degree(°)θ1/2	Input voltage(V)	Typical operating current(mA)	Typical consumption(W)	Typical luminance(lm)	IK rate
B9DW-3-1	FB11B4	20°	120 / 240	120V=142 × 3 240V=78 × 3	17.4 × 3	1227 × 3	07

Landscape / Street pole light
B9DWQ0460

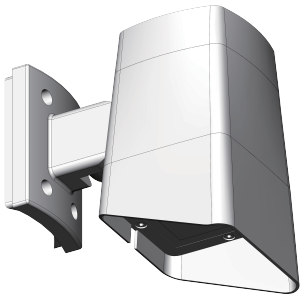

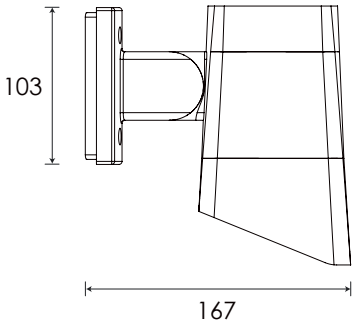

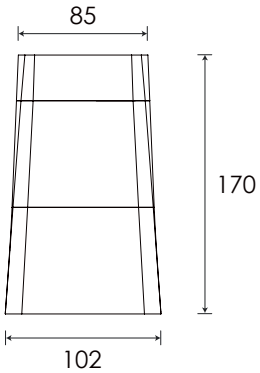

Specification

Housing	12# Die-Casting aluminum finishing or powder painting T=60-80μm.Adhesion of ISO class 1/ASTM class 4B.	**Power Cable**	Outside of luminaire 120V/240V: H05RN-F 3×1.0mm², L=4m
Light Window	Tempered Glass.T=4mm	**Mounting Base**	Powder coated die-casting aluminum
LED Driver	Constant Voltage Input, Constant Current Output	**Dimming Support**	TRIAC PWM Available
LED	NICHIA	**Operating Restrict**	Temperature of environment between -20˚C~40˚C
Lens	Optical lens, efficiency≥85%		

Regular Painting Color

Basic

Sanded Grey
KAL 7042

Secondary

Sanded Black
RAL 9005

Lens

Item Code		Referenced Degree(°)θ1/2					
	FB11B4	**9°**	**15°**	**20°**	**30°**	**45°**	**60°**

Item	Light Source	Lens	The manufacturer selected lens degree(°)θ1/2	Input voltage(V)	Typical operating current(mA)	Typical consumption(W)	Typical luminance(lm)	IK rate
B9DWQ0460	4 × 4W	FB11B4	20°	120 / 240	120V=142 240V=78	17.4	1227	07

Photometric

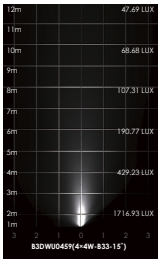

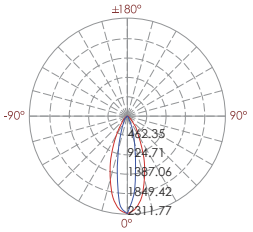

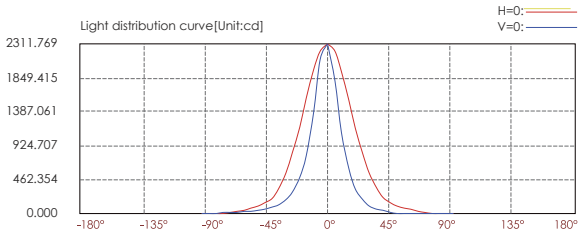

Lux distance cure

Illuminance at a distance

	Center beam LUX	Beam width V	Beam width H
2m	569.36 LUX	1.5m	0.8m
4m	142.34 LUX	2.9m	1.5m
6m	63.26 LUX	4.4m	2.3m
8m	35.58 LUX	5.9m	3.0m
10m	22.77 LUX	7.3m	3.8m
12m	15.82 LUX	8.8m	4.6m

Horiz.Spread:40.3 Vert.Spread:21.5

Landscape / Street pole light
B9DW-5-1 @17.4W×5

Adjustable Beam Direction

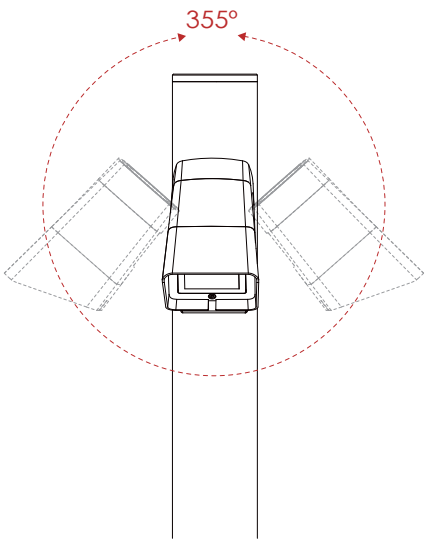

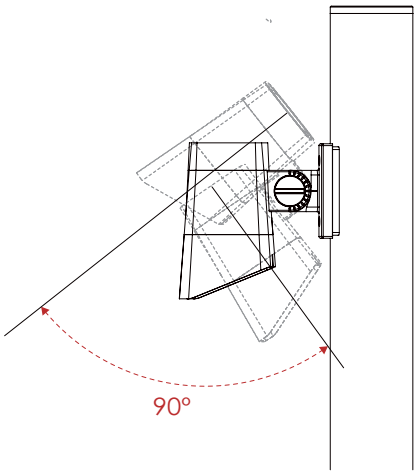

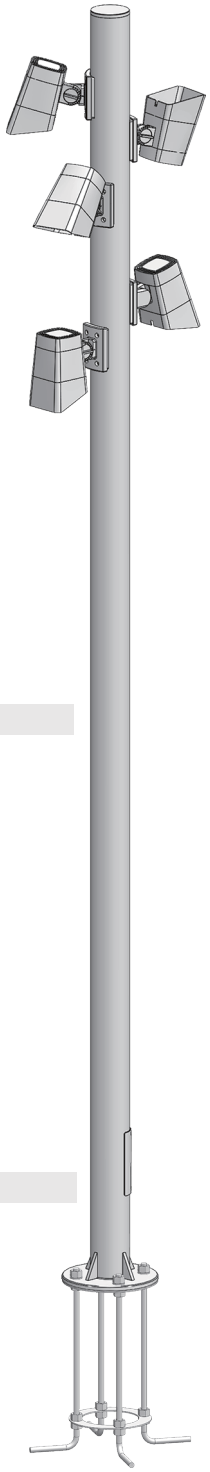

Regular Painting Color

Basic	Secondary
Sanded Grey **KAL 7042**	Sanded Black **RAL 9005**

Flag Base

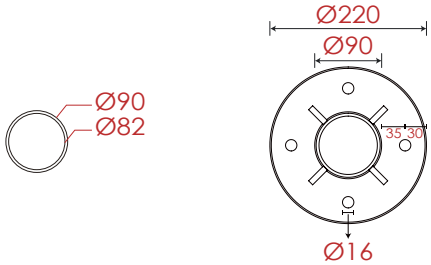

Pole Dimension & Material

Diameter : Ø90mm
Height : 3000mm (Customizeable)
Material : Aluminum

Accessories

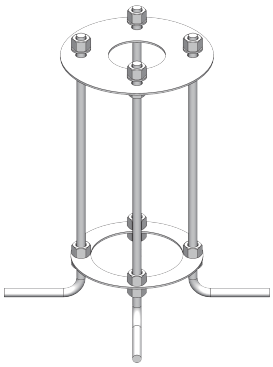

Base Dimension

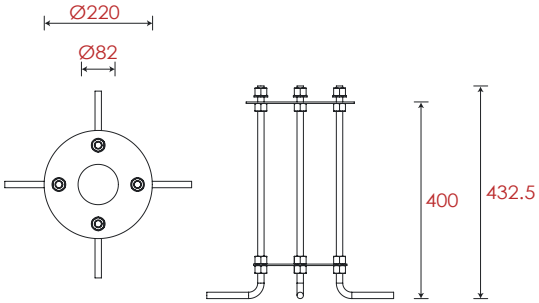

Item	Lens	The manufacturer selected lens degree(°)θ1/2	Input voltage(V)	Typical operating current(mA)	Typical consumption(W)	Typical luminance(lm)	IK rate
B9DW-5-1	FB11B4	20°	120 / 240	120V=142 × 5 240V=78 × 5	17.4 × 5	1227 × 5	07

Landscape / Street pole light
B9DWQ0460

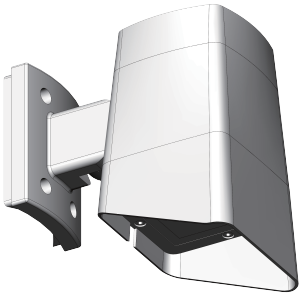

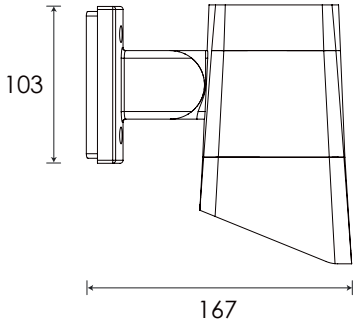

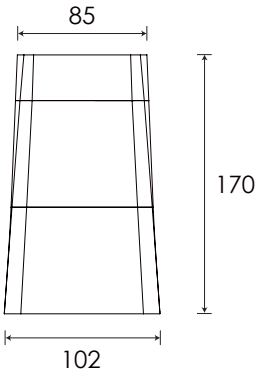

Specification

Housing	12# Die-Casting aluminum finishing or powder painting T=60-80μm.Adhesion of ISO class 1/ASTM class 4B.	**Power Cable**	Outside of luminaire 120V/240V: H05RN-F 3×1.0mm², L=4m
Light Window	Tempered Glass.T=4mm	**Mounting Base**	Powder coated die-casting aluminum
LED Driver	Constant Voltage Input, Constant Current Output	**Dimming Support**	TRIAC PWM Available
LED	NICHIA	**Operating Restrict**	Temperature of environment between -20˚C~40˚C
Lens	Optical lens, efficiency≥85%		

Regular Painting Color

Basic	Secondary
Sanded Grey **KAL 7042**	Sanded Black **RAL 9005**

Lens

Item Code		Referenced Degree(°)θ1/2					
	FB11B4	**9°**	**15°**	**20°**	**30°**	**45°**	**60°**

Item	Light Source	Lens	The manufacturer selected lens degree(°)θ1/2	Input voltage(V)	Typical operating current(mA)	Typical consumption(W)	Typical luminance(lm)	IK rate
B9DWQ0460	4 × 4W	FB11B4	20°	120 / 240	120V=142 240V=78	17.4	1227	07

Photometric

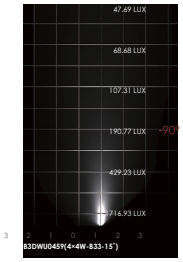

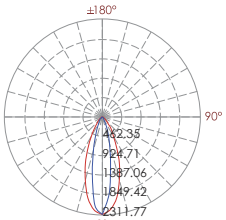

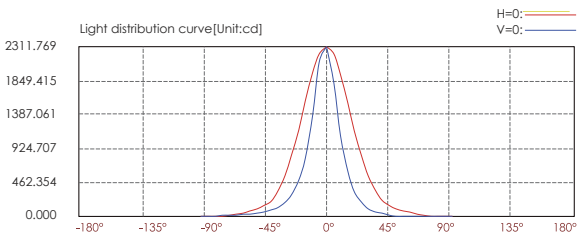

Lux distance cure

Illuminance at a distance

	Center beam LUX	Beam width V	Beam width H
2m	569.36 LUX	1.5m	0.8m
4m	142.34 LUX	2.9m	1.5m
6m	63.26 LUX	4.4m	2.3m
8m	35.58 LUX	5.9m	3.0m
10m	22.77 LUX	7.3m	3.8m
12m	15.82 LUX	8.8m	4.6m

Horiz.Spread:40.3 Vert.Spread:21.5

Landscape / Street pole light
B9ZAC0156 @1.2W

Adjustable Beam Direction

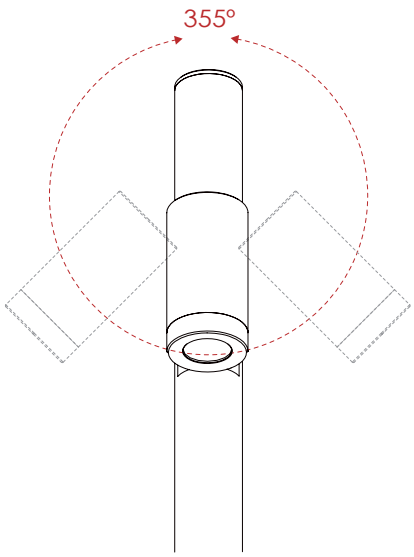

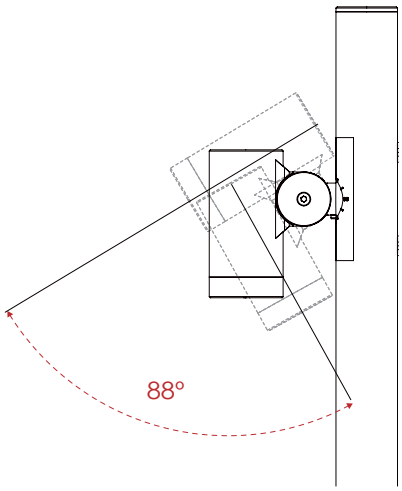

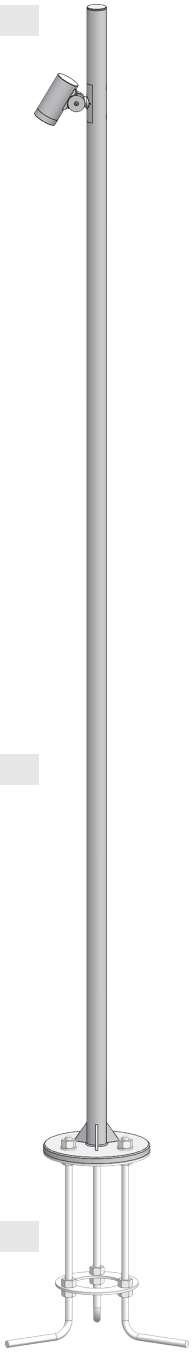

Regular Painting Color

Basic
Sanded Grey
KAL 7042

Secondary
Sanded Black
RAL 9005

Flag Base

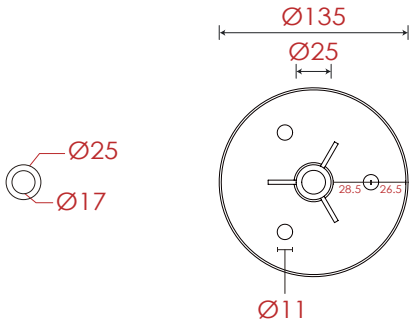

Pole Dimension & Material

Diameter : Ø25mm
Height : 1500mm (Customizeable)
Material : Aluminum

Accessories

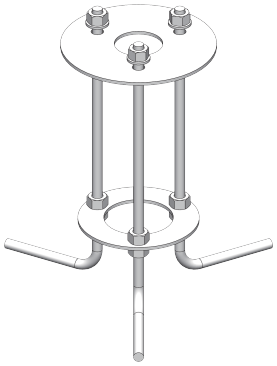

Base Dimension

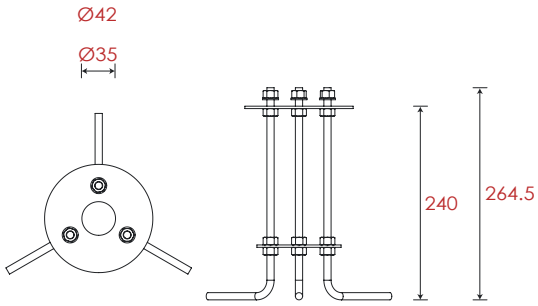

Item	Lens	The manufacturer selected lens degree(°)θ1/2	Input voltage(V)	Typical operating current(mA)	Typical consumption(W)	Typical luminance(lm)	IK rate
B9ZAC0156	B17	30°	24	24V=48	1.2	100	07

Landscape / Street pole light
B9ZAR0156

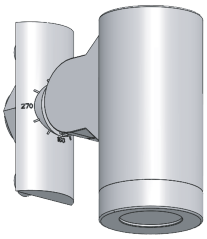

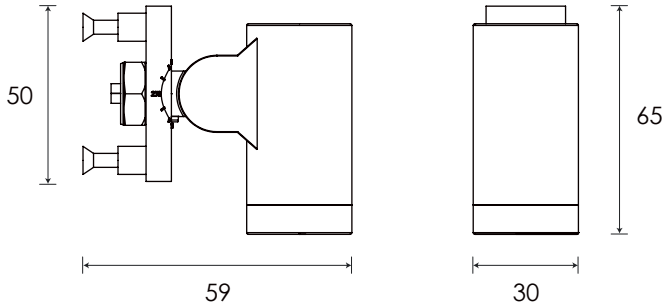

Specification

Housing	12# Die-Casting aluminum finishing or powder painting T=60-80μm.Adhesion of ISO class 1/ASTM class 4B.	**Power Cable**	Outside of luminaire 120V/240V: H05RN-F 3×1.0mm², L=2m
Light Window	Tempered Glass.T=4mm	**Mounting Base**	Powder coated die-casting aluminum
LED Driver	Constant Voltage Input, Constant Current Output	**Dimming Support**	TRIAC PWM Available
LED	NICHIA	**Operating Restrict**	Temperature of environment between -20˚C~40˚C
Lens	Optical lens, efficiency≥85%		

Regular Painting Color

Basic
Sanded Grey
KAL 7042

Secondary
Sanded Black
RAL 9005

Lens

Item Code		Referenced Degree(°)θ1/2			
	B17	**15°**	**20°**	**30°**	**45°**

Item	Light Source	Lens	The manufacturer selected lens degree(°)θ1/2	Input voltage(V)	Typical operating current(mA)	Typical consumption(W)	Typical luminance(lm)	IK rate
B9ZAR0156	1 × 1W	B17	30°	24	24V=48	1.2	100	07

Photometric

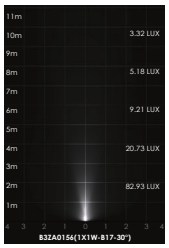

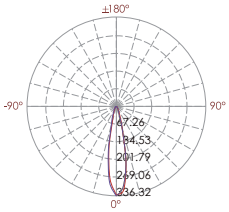

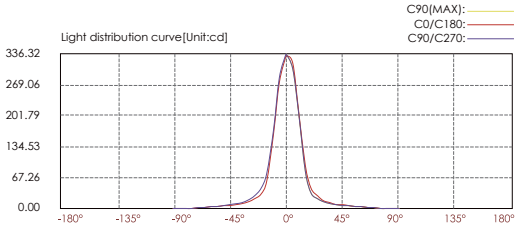

Lux distance curve

Illuminance at a distance

Center beam LUX		Beam width V	Beam width H
2m	82.93 LUX	0.8m	0.8m
4m	20.73 LUX	1.5m	1.5m
6m	90.21 LUX	2.3m	2.3m
8m	5.18 LUX	3.1m	3.1m
10m	3.32 LUX	3.8m	3.8m
12m	2.30 LUX	4.6m	4.6m

Ver.Spread:21.7 Horiz.Spread:21.7

Landscape / Street pole light
B9ZAC0256 @1.2W×2

Adjustable Beam Direction

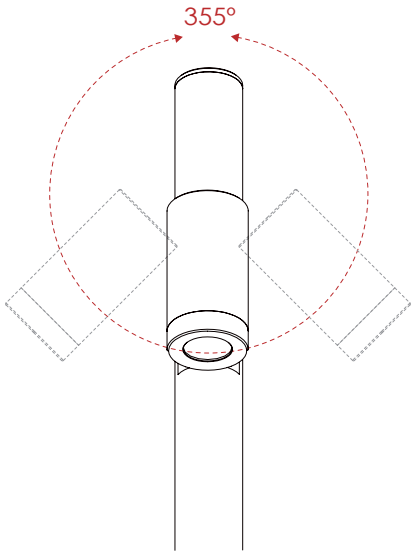

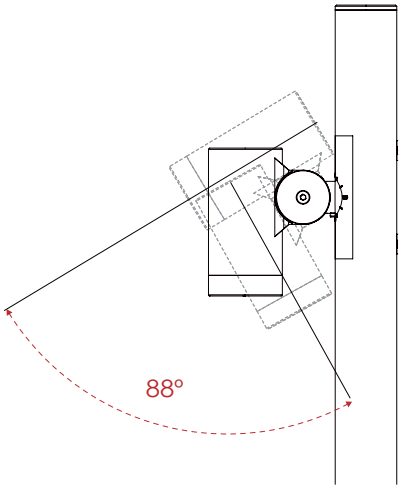

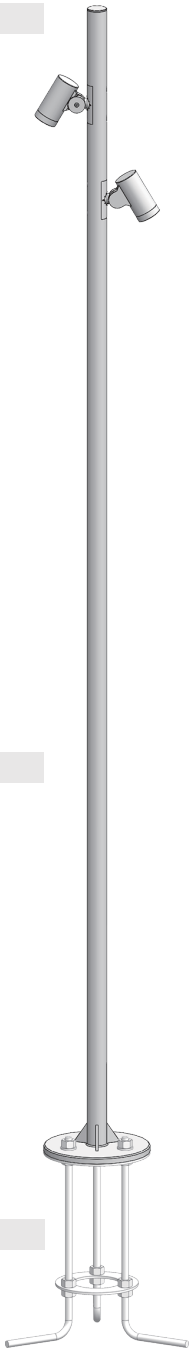

Regular Painting Color

Basic	Secondary
Sanded Grey **KAL 7042**	Sanded Black **RAL 9005**

Flag Base

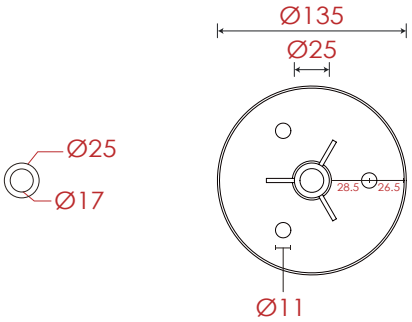

Pole Dimension & Material

Diameter : Ø25mm
Height : 1500mm (Customizeable)
Material : Aluminum

Accessories

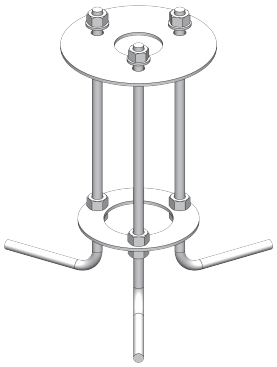

Base Dimension

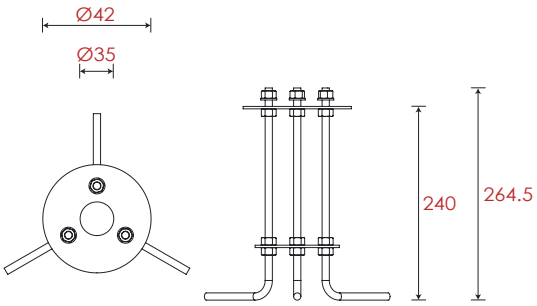

Item	Lens	The manufacturer selected lens degree(°)θ1/2	Input voltage(V)	Typical operating current(mA)	Typical consumption(W)	Typical luminance(lm)	IK rate
B9ZAC0256	B17	30°	24	24V=48 × 2	1.2 × 2	100 × 2	07

Landscape / Street pole light
B9ZAR0156

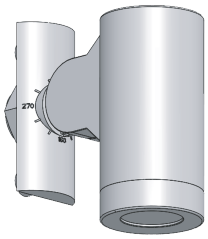

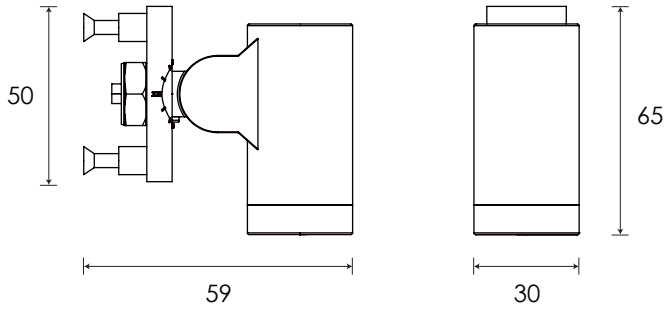

Specification

Housing	12# Die-Casting aluminum finishing or powder painting T=60-80μm.Adhesion of ISO class 1/ASTM class 4B.	**Power Cable**	Outside of luminaire 120V/240V: H05RN-F 3×1.0mm², L=2m
Light Window	Tempered Glass.T=4mm	**Mounting Base**	Powder coated die-casting aluminum
LED Driver	Constant Voltage Input, Constant Current Output	**Dimming Support**	TRIAC PWM Available
LED	NICHIA	**Operating Restrict**	Temperature of environment between -20˚C~40˚C
Lens	Optical lens, efficiency≥85%		

Regular Painting Color

Basic

Sanded Grey
KAL 7042

Secondary

Sanded Black
RAL 9005

Lens

Item Code		Referenced Degree(°)θ1/2			
	B17	**15°**	**20°**	**30°**	**45°**

Item	Light Source	Lens	The manufacturer selected lens degree(°)θ1/2	Input voltage(V)	Typical operating current(mA)	Typical consumption(W)	Typical luminance(lm)	IK rate
B9ZAR0156	1 × 1W	B17	30°	24	24V=48	1.2	100	07

Photometric

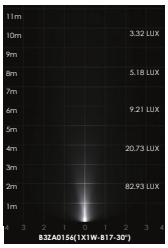

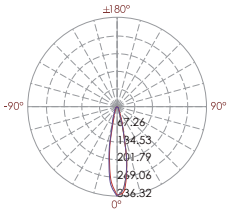

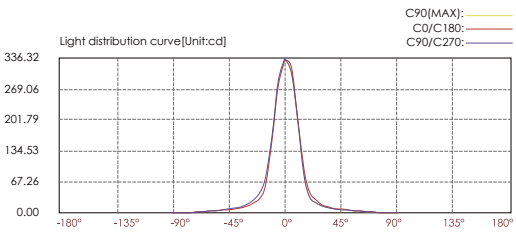

Lux distance curve

Illuminance at a distance

	Center beam LUX	Beam width V	Beam width H
2m	82.93 LUX	0.8m	0.8m
4m	20.73 LUX	1.5m	1.5m
6m	90.21 LUX	2.3m	2.3m
8m	5.18 LUX	3.1m	3.1m
10m	3.32 LUX	3.8m	3.8m
12m	2.30 LUX	4.6m	4.6m

Ver.Spread:21.7 Horiz.Spread:21.7

Landscape / Street pole light
B9ZAC0356 @1.2W×3

Adjustable Beam Direction

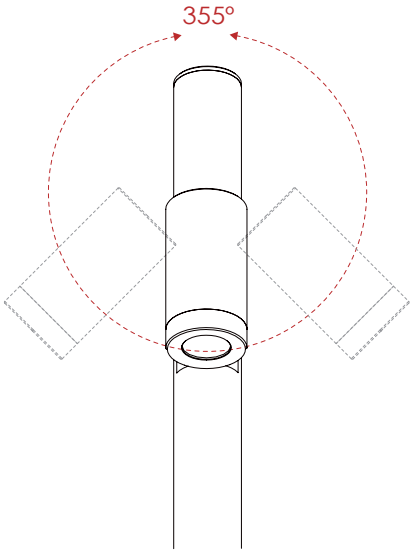

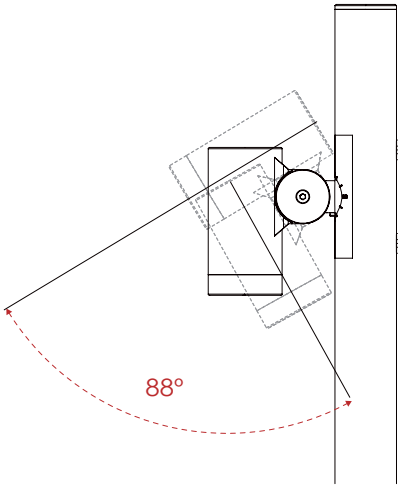

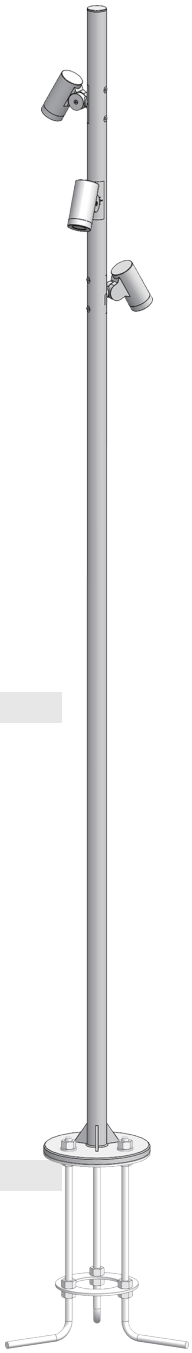

Regular Painting Color

Basic	Secondary
Sanded Grey **KAL 7042**	Sanded Black **RAL 9005**

Flag Base

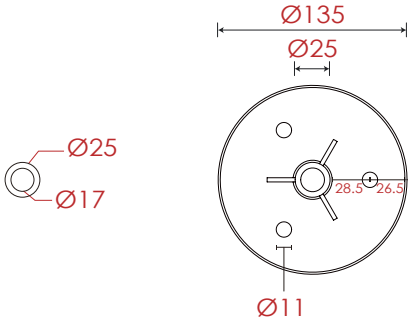

Pole Dimension & Material

Diameter : Ø25mm
Height : 1500mm (Customizeable)
Material : Aluminum

Accessories

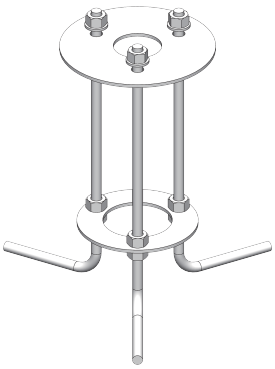

Base Dimension

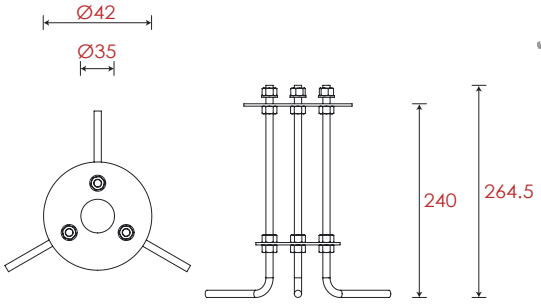

Item	Lens	The manufacturer selected lens degree(°)θ1/2	Input voltage(V)	Typical operating current(mA)	Typical consumption(W)	Typical luminance(lm)	IK rate
B9ZAC0356	B17	30°	24	24V=48 × 3	1.2 × 3	100 × 3	07

Landscape / Street pole light
B9ZAR0156

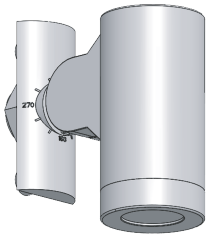

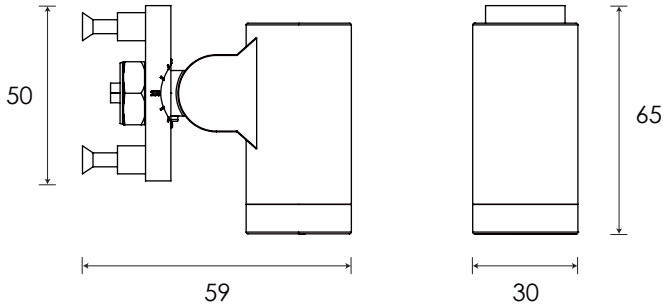

Specification

Housing	12# Die-Casting aluminum finishing or powder painting T=60-80μm.Adhesion of ISO class 1/ASTM class 4B.	**Power Cable**	Outside of luminaire 120V/240V: H05RN-F 3×1.0mm², L=2m
Light Window	Tempered Glass.T=4mm	**Mounting Base**	Powder coated die-casting aluminum
LED Driver	Constant Voltage Input, Constant Current Output	**Dimming Support**	TRIAC PWM Available
LED	NICHIA	**Operating Restrict**	Temperature of environment between -20˚C~40˚C
Lens	Optical lens, efficiency≥85%		

Regular Painting Color

Basic

Sanded Grey
KAL 7042

Secondary

Sanded Black
RAL 9005

Lens

Item Code		Referenced Degree(°)θ1/2			
	B17	**15°**	**20°**	**30°**	**45°**

Item	Light Source	Lens	The manufacturer selected lens degree(°)θ1/2	Input voltage(V)	Typical operating current(mA)	Typical consumption(W)	Typical luminance(lm)	IK rate
B9ZAR0156	1 × 1W	B17	30°	24	24V=48	1.2	100	07

Photometric

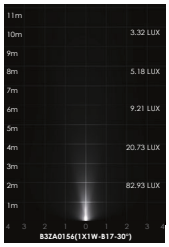

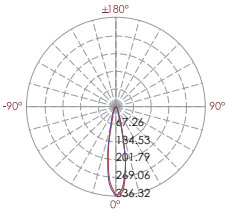

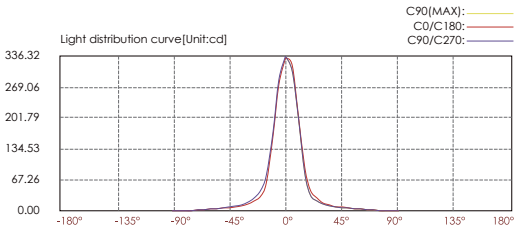

Lux distance curve

Illuminance at a distance

	Center beam LUX	Beam width V	Beam width H
2m	82.93 LUX	0.8m	0.8m
4m	20.73 LUX	1.5m	1.5m
6m	90.21 LUX	2.3m	2.3m
8m	5.18 LUX	3.1m	3.1m
10m	3.32 LUX	3.8m	3.8m
12m	2.30 LUX	4.6m	4.6m

Ver.Spread:21.7 Horiz.Spread:21.7

Landscape / Street pole light
B9ZAC0556 @1.2W×5

Adjustable Beam Direction

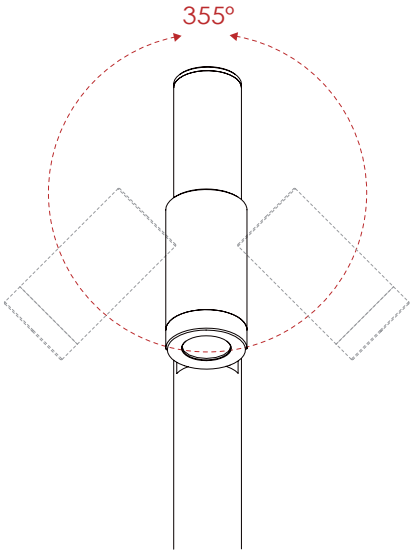

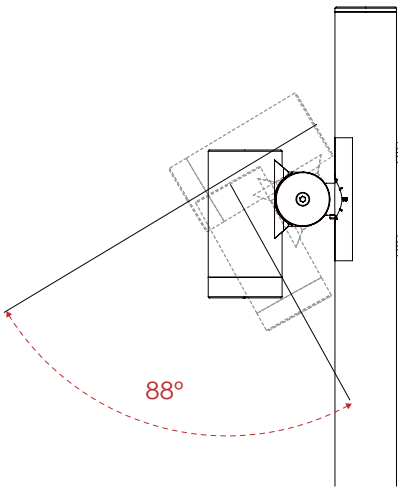

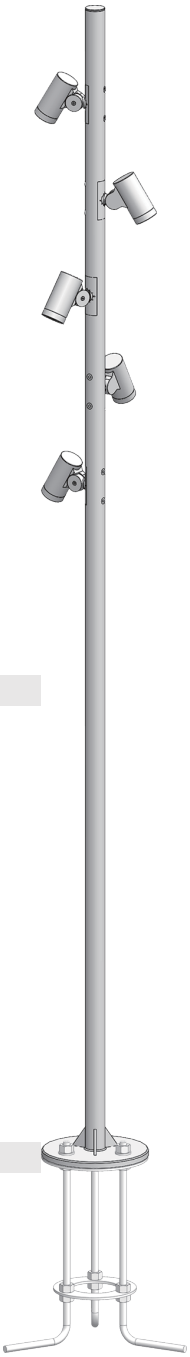

Regular Painting Color

Basic
Sanded Grey
KAL 7042

Secondary
Sanded Black
RAL 9005

Flag Base

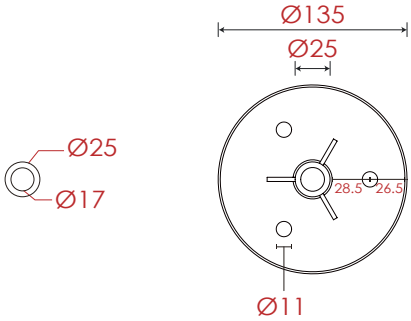

Pole Dimension & Material

Diameter : Ø25mm
Height : 1500mm (Customizeable)
Material : Aluminum

Accessories

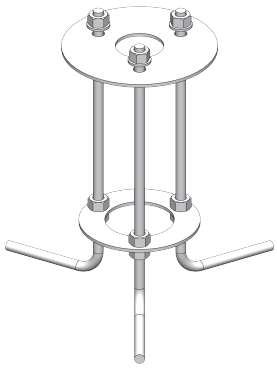

Base Dimension

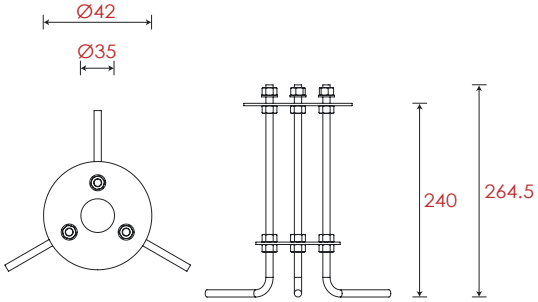

Item	Lens	The manufacturer selected lens degree(°)θ1/2	Input voltage(V)	Typical operating current(mA)	Typical consumption(W)	Typical luminance(lm)	IK rate
B9ZAC0556	B17	30°	24	24V=48 × 5	1.2 × 5	100 × 5	07

Landscape / Street pole light
B9ZAR0156

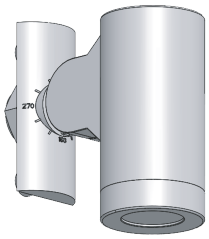

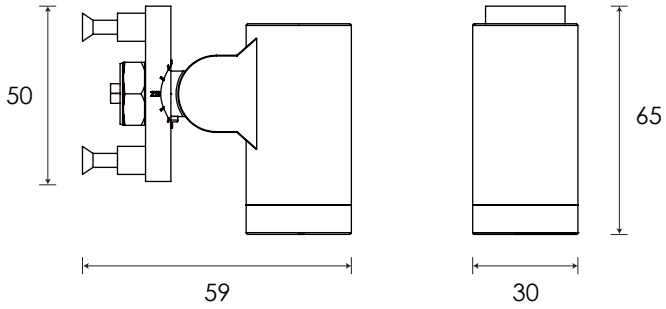

Specification

Housing	12# Die-Casting aluminum finishing or powder painting T=60-80μm.Adhesion of ISO class 1/ASTM class 4B.	**Power Cable**	Outside of luminaire 120V/240V: H05RN-F 3×1.0mm², L=2m
Light Window	Tempered Glass.T=4mm	**Mounting Base**	Powder coated die-casting aluminum
LED Driver	Constant Voltage Input, Constant Current Output	**Dimming Support**	TRIAC PWM Available
LED	NICHIA	**Operating Restrict**	Temperature of environment between -20˚C~40˚C
Lens	Optical lens, efficiency≥85%		

Regular Painting Color

Basic
Sanded Grey
KAL 7042

Secondary
Sanded Black
RAL 9005

Lens

Item Code		Referenced Degree(°)θ1/2			
	B17	**15°**	**20°**	**30°**	**45°**

Item	Light Source	Lens	The manufacturer selected lens degree(°)θ1/2	Input voltage(V)	Typical operating current(mA)	Typical consumption(W)	Typical luminance(lm)	IK rate
B9ZAR0156	1 × 1W	B17	30°	24	24V=48	1.2	100	07

Photometric

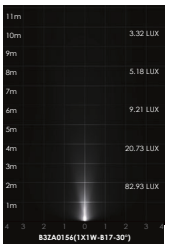

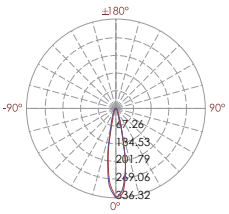

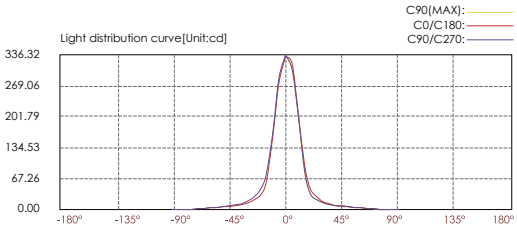

Lux distance curve

Illuminance at a distance

	Center beam LUX	Beam width V	Beam width H
2m	82.93 LUX	0.8m	0.8m
4m	20.73 LUX	1.5m	1.5m
6m	90.21 LUX	2.3m	2.3m
8m	5.18 LUX	3.1m	3.1m
10m	3.32 LUX	3.8m	3.8m
12m	2.30 LUX	4.6m	4.6m

Ver.Spread:21.7 Horiz.Spread:21.7

Landscape / Street pole light
B9ZM-1-1

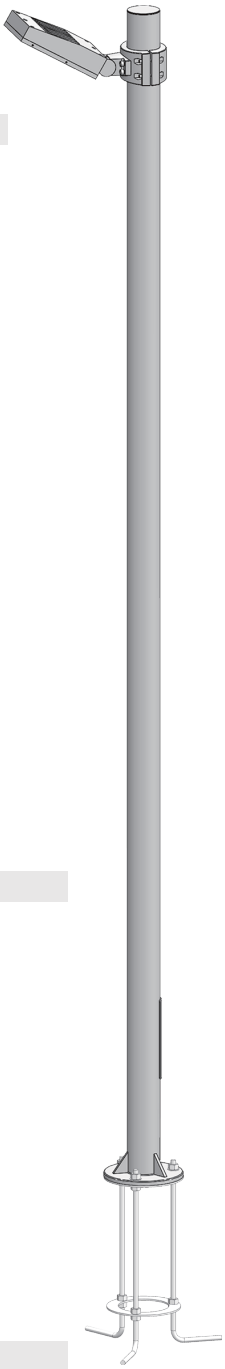

Adjustable Beam Direction

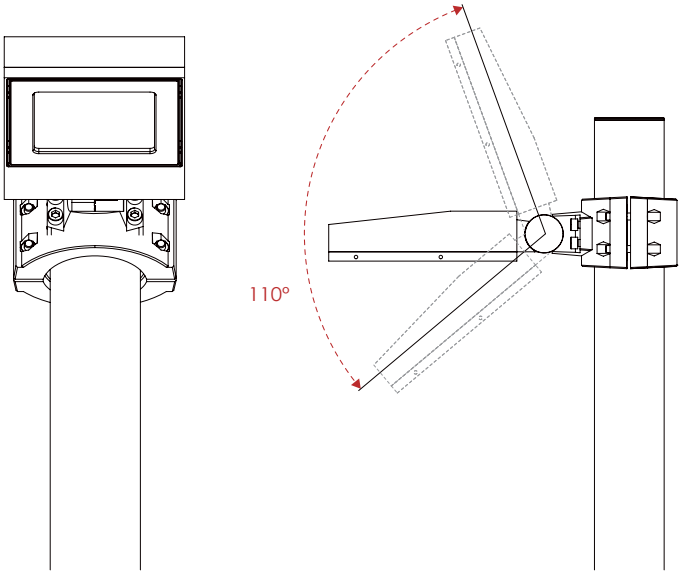

Regular Painting Color

Basic
Sanded Grey
KAL 7042

Secondary
Sanded Black
RAL 9005

Flag Base

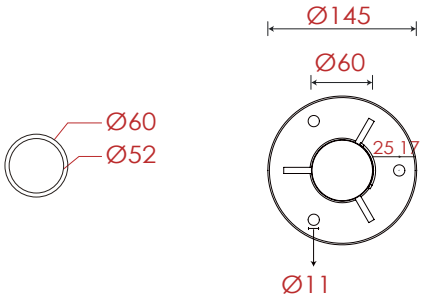

Pole Dimension

Diameter : Ø60mm
Height : 2200mm (Customizeable)
Material : Aluminum

Accessories

Basic

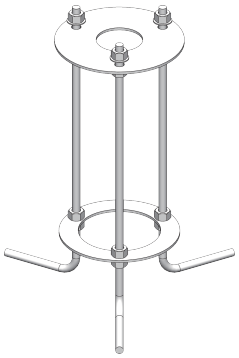

Base Dimension

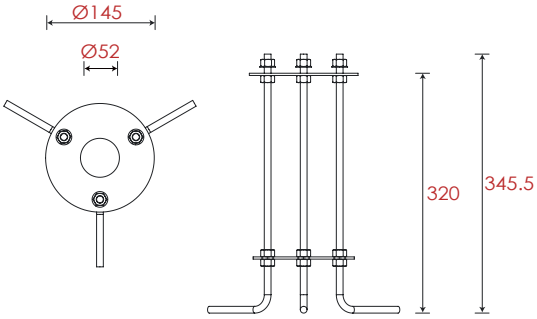

Item	Light Source	Lens	The manufacturer selected lens degree(°)θ1/2	Input voltage(V)	Typical operating current(mA)	Typical consumption(W)	Typical luminance(lm)	IK rate
B9ZM-1-1	7W	B71	24°	DC 24 AC 120 AC 240	24V=360 120V=71 240V=40	24V=8.6 120V=8.5 240V=8.6	695	07

Landscape / Street pole light
B9ZM00000

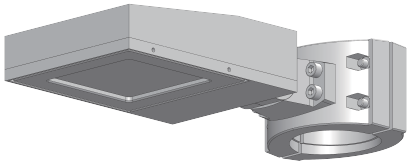

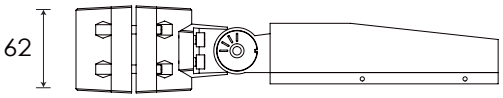

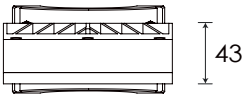

Specification

Housing	12# Die-Casting aluminum finishing or powder painting T=60-80μm.Adhesion of ISO class 1/ASTM class 4B
Light Window	Tempered Glass.T=3mm
Cable Gland	IP68 PG-9 PA66
Gasket	Tooling shaped seal
LED	NICHIA

LED Driver	Constant Voltage Input, Constant Current Output
Power Cable	Outside of luminaire 12V/24V: H05RN-F 2×1.0mm², L=0.3m 120V/240V: H05RN-F 3×1.0mm², L=0.3m
Dimming Support	TRIAC PWM Available 1-10V Dali Customized

Operating Restrict

- Temperature of water between -20˚C~40˚C

Lens

Item Code		Referenced Degree(°)θ1/2			
	B71	**15°**	**24°**	**45°**	**60°**

Adjustable Beam Direction

Basic	Secondary
Sanded Grey **KAL 7042**	Sanded Black **RAL 9005**

Item	Light Source	Lens	The manufacturer selected lens degree(°)θ1/2	Input voltage(V)	Typical operating current(mA)	Typical consumption(W)	Typical luminance(lm)	IK rate
B9ZM00000	7W	B71	24°	DC 24 AC 120 AC 240	24V=360 120V=71 240V=40	24V=8.6 120V=8.5 240V=8.6	695	07

Photometric

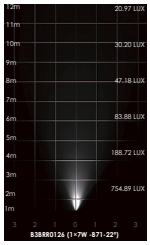

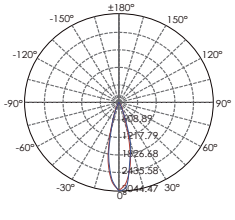

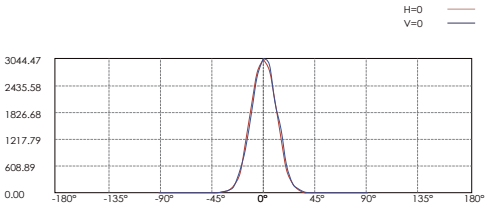

Lux distance Curve

Illuminance at a Distance

	Center Beam LUX	Beam Width V	Beam Width H
2m	754.89 LUX	0.9m	0.9m
4m	188.72 LUX	1.9m	1.9m
6m	83.88 LUX	2.8m	2.8m
8m	47.18 LUX	3.7m	3.7m
10m	30.20 LUX	4.7m	4.7m
12m	20.97 LUX	5.6m	5.6m

Vert.Spread:26.2 Horiz.Spread:26.3

Landscape / Street pole light
B9ZM-2-1

Adjustable Beam Direction

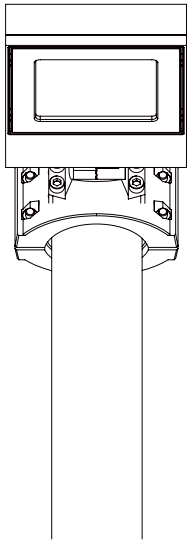

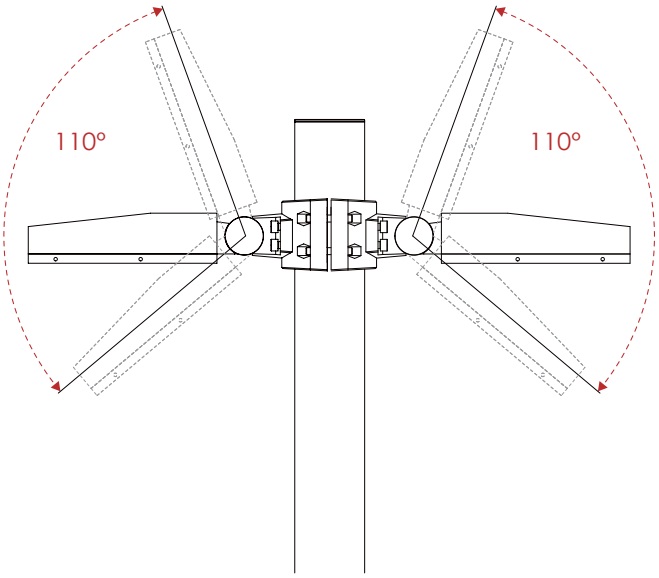

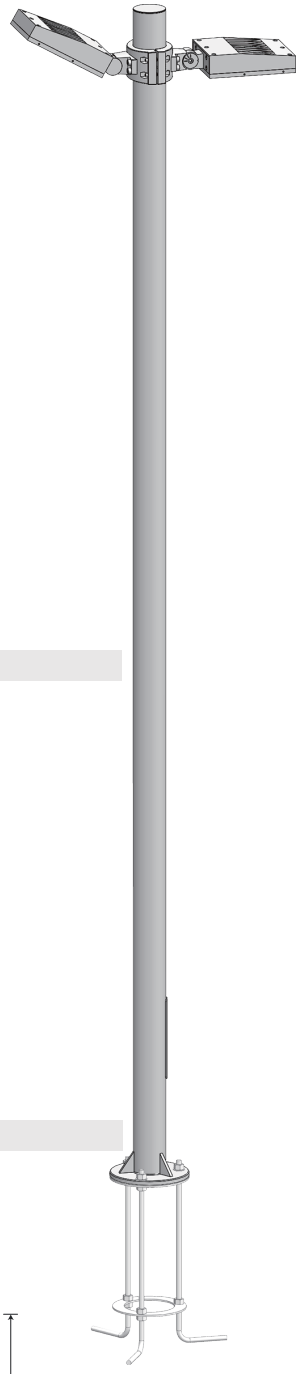

Regular Painting Color

Basic
Sanded Grey
KAL 7042

Secondary
Sanded Black
RAL 9005

Flag Base

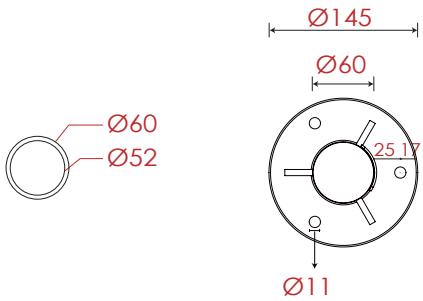

Pole Dimension

Diameter : Ø60mm
Height : 2200mm (Customizeable)
Material : Aluminum

Accessories

Basic

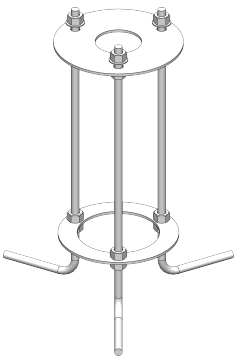

Base Dimension

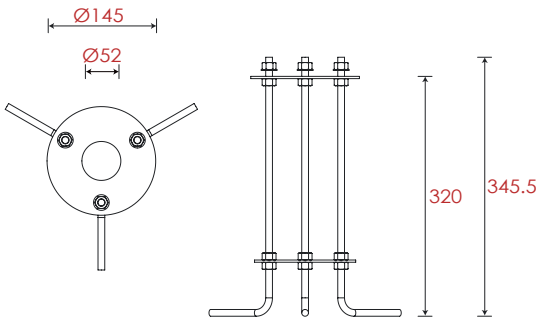

Item	Light Source	Lens	The manufacturer selected lens degree(°)θ1/2	Input voltage(V)	Typical operating current(mA)	Typical consumption(W)	Typical luminance(lm)	IK rate
B9ZM-2-1	7W	B71	24°	DC 24 AC 120 AC 240	24V=360 × 2 120V=71 × 2 240V=40 × 2	24V=8.6 × 2 120V=8.5 × 2 240V=8.6 × 2	695 × 2	07

Landscape / Street pole light
B9ZM00000

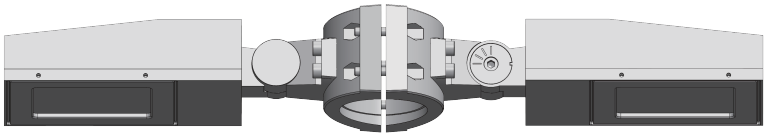

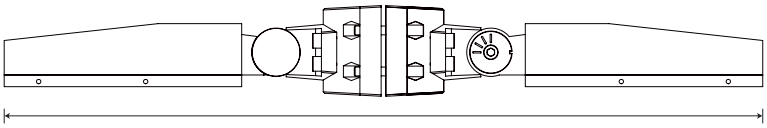

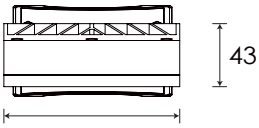

Specification

Housing	12# Die-Casting aluminum finishing or powder painting T=60-80μm.Adhesion of ISO class 1/ASTM class 4B
Light Window	Tempered Glass.T=3mm
Cable Gland	IP68 PG-9 PA66
Gasket	Tooling shaped seal
LED	NICHIA
LED Driver	Constant Voltage Input, Constant Current Output
Power Cable	Outside of luminaire 12V/24V: H05RN-F 2×1.0mm², L=0.3m 120V/240V: H05RN-F 3×1.0mm², L=0.3m
Dimming Support	TRIAC PWM Available 1-10V Dali Customized

Operating Restrict

- Temperature of water between -20˚C~40˚C

Lens

Item Code		Referenced Degree(°)θ1/2			
	B71	**15°**	**24°**	**45°**	**60°**

Adjustable Beam Direction

Basic	Secondary
Sanded Grey **KAL 7042**	Sanded Black **RAL 9005**

Item	Light Source	Lens	The manufacturer selected lens degree(°)θ1/2	Input voltage(V)	Typical operating current(mA)	Typical consumption(W)	Typical luminance(lm)	IK rate
B9ZM00000	7W	B71	24°	DC 24 AC 120 AC 240	24V=360 × 2 120V=71 × 2 240V=40 × 2	24V=8.6 × 2 120V=8.5 × 2 240V=8.6 × 2	695 × 2	07

Photometric

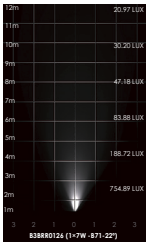

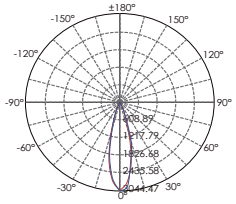

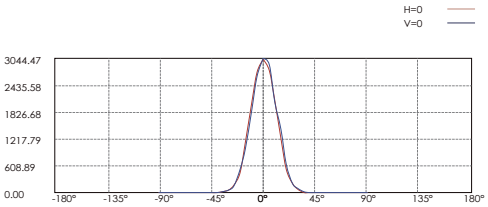

Lux distance Curve

Illuminance at a Distance

	Center Beam LUX	Beam Width V	Beam Width H
2m	754.89 LUX	0.9m	0.9m
4m	188.72 LUX	1.9m	1.9m
6m	83.88 LUX	2.8m	2.8m
8m	47.18 LUX	3.7m	3.7m
10m	30.20 LUX	4.7m	4.7m
12m	20.97 LUX	5.6m	5.6m

Vert.Spread:26.2 Horiz.Spread:26.3

Landscape / Street pole light
B9AX-1-1

Adjustable Beam Direction

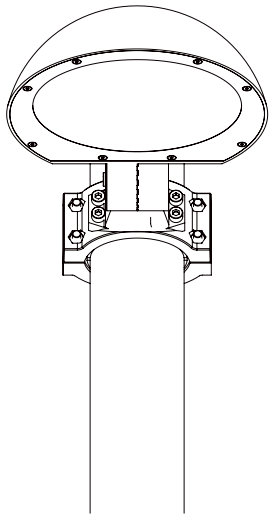

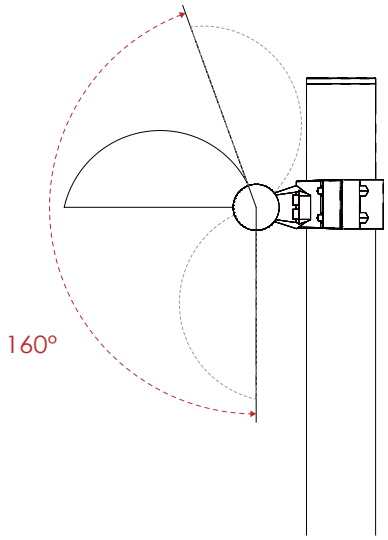

Regular Painting Color

Basic
Sanded Grey
KAL 7042

Secondary
Sanded Black
RAL 9005

Flag Base

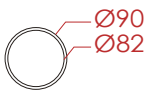

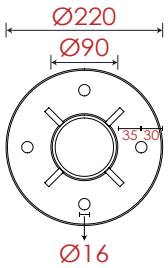

Pole Dimension & Material

Diameter : Ø90mm
Height : 3000mm (Customizeable)
Material : Aluminum

Accessories

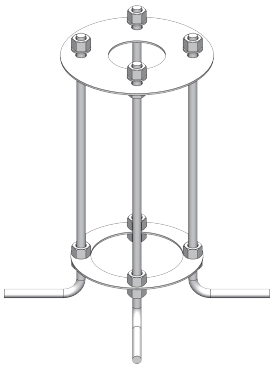

Base Dimension

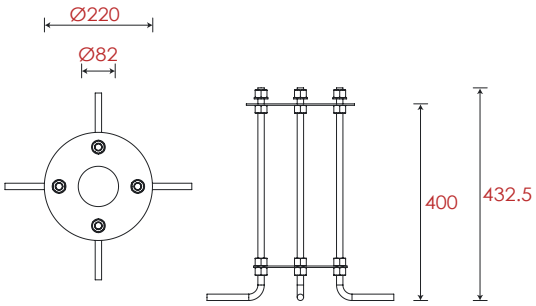

Item	Light Source	Input voltage(V)	Typical operating current(mA)	Typical consumption(W)	Typical luminance(lm)	IK rate
B9AX-1-1	18W	DC 24 AC 240	24V=770 240V=90	24V=18.5 240V=19.5	240V=2054	07

Landscape / Street pole light
B9AX00000

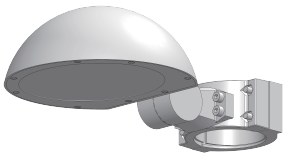

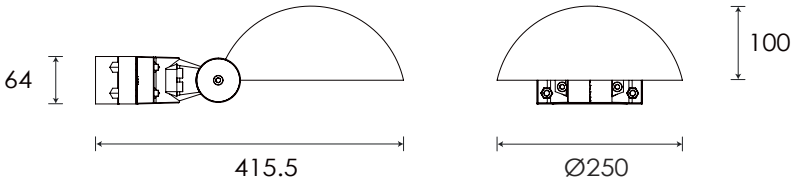

Specification

Housing	T=60-80μm Adhesion of ISO class 1/ASTM class 4B 12# Die-casting powder coated aluminum.
Light Window	PC
Gasket	Tooling shaped seal
LED	SMD3030
LED Driver	Constant Voltage Input, Constant Current Output
Power Cable	Outside of luminaire 12V/24V: H05RN-F 2×1.0mm², L=0.3m 120V/240V: H05RN-F 3×1.0mm², L=0.3m
Dimming Support	TRIAC PWM Available 1-10V Dali Customized

Operating Restrict

- Temperature of water between -20˚C~40˚C

Adjustable Beam Direction

Basic	Secondary
Sanded Grey **KAL 7042**	Sanded Black **RAL 9005**

Item	Light Source	Input voltage(V)	Typical operating current(mA)	Typical consumption(W)	Typical luminance(lm)	IK rate
B9AX00000	18W	DC 24 AC 240	24V=770 240V=90	24V=18.5 240V=19.5	240V=2054	07

Photometric

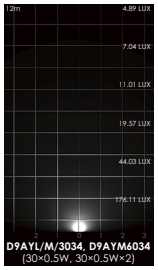

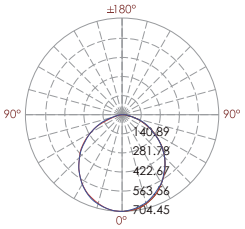

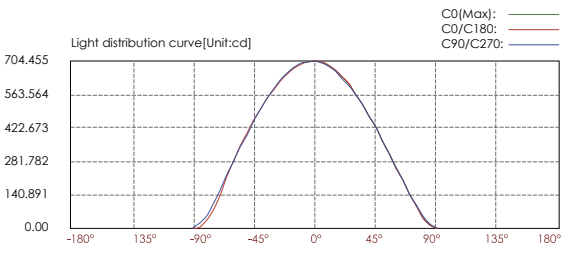

Lux distance cure

Illuminance at a distance

	Center beam LUX	Beam width H	Beam width V
2m	176.11 LUX	5.3m	5.3m
4m	44.03 LUX	10.6m	10.5m
6m	19.57 LUX	15.9m	15.8m
8m	11.01 LUX	21.2m	21.1m
10m	7.04 LUX	26.5m	26.3m
12m	4.89 LUX	31.8m	31.6m

Horiz.Spread: 105.9 Vert.Spread: 105.6

Landscape / Street pole light
B9AX-2-1

Adjustable Beam Direction

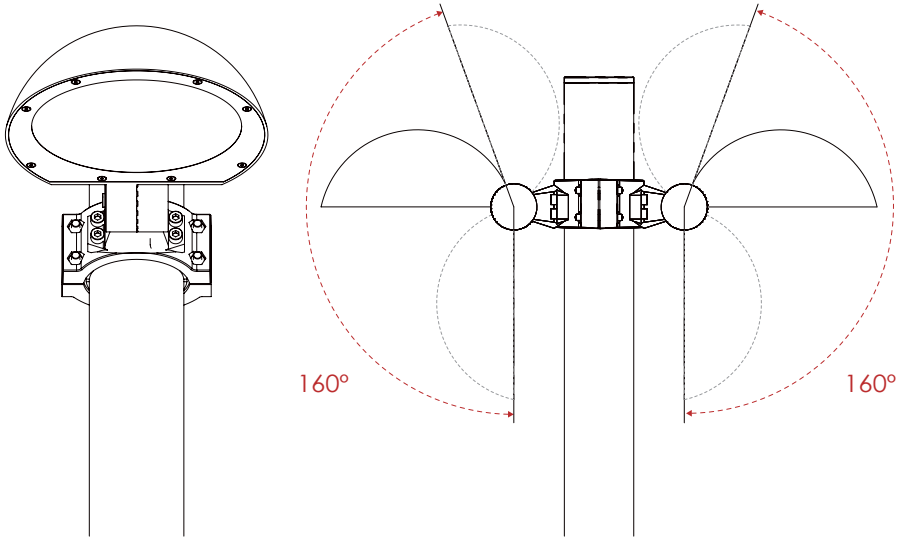

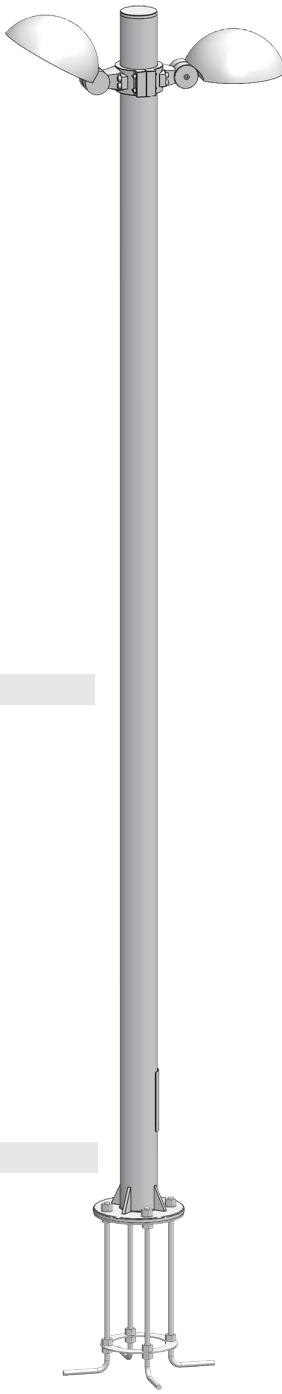

Regular Painting Color

Basic	Secondary
Sanded Grey **KAL 7042**	Sanded Black **RAL 9005**

Flag Base

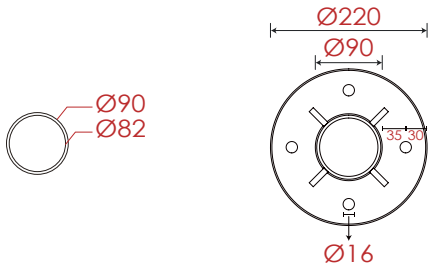

Pole Dimension & Material

Diameter : Ø90mm
Height : 3000mm (Customizeable)
Material : Aluminum

Accessories

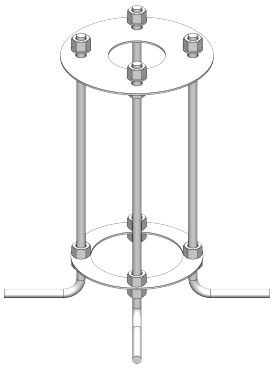

Base Dimension

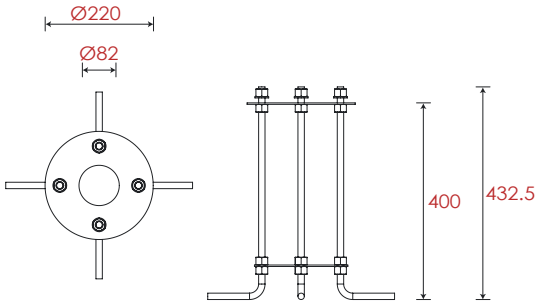

Item	Light Source	Input voltage(V)	Typical operating current(mA)	Typical consumption(W)	Typical luminance(lm)	IK rate
B9AX-2-1	18W	DC 24 AC 240	24V=770 × 2 240V=90 × 2	24V=18.5 × 2 240V=19.5 × 2	240V=2054 × 2	07

Landscape / Street pole light
B9AX00000

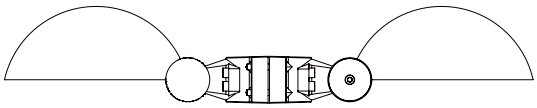

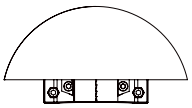

721

Ø250

Specification

Housing	T=60-80μm Adhesion of ISO class 1/ASTM class 4B 12# Die-casting powder coated aluminum.
Light Window	PC
Gasket	Tooling shaped seal
LED	SMD3030
LED Driver	Constant Voltage Input, Constant Current Output
Power Cable	Outside of luminaire 12V/24V: H05RN-F 2×1.0mm², L=0.3m 120V/240V: H05RN-F 3×1.0mm², L=0.3m
Dimming Support	TRIAC PWM Available 1-10V Dali Customized

Operating Restrict

- Temperature of water between -20˚C~40˚C

Adjustable Beam Direction

Basic

Sanded Grey
KAL 7042

Secondary

Sanded Black
RAL 9005

Item	Light Source	Input voltage(V)	Typical operating current(mA)	Typical consumption(W)	Typical luminance(lm)	IK rate
B9AX00000	18W	DC 24 AC 240	24V=770 × 2 240V=90 × 2	24V=18.5 × 2 240V=19.5 × 2	240V=2054 × 2	07

Photometric

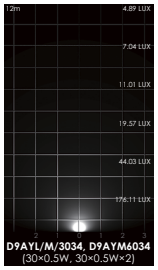

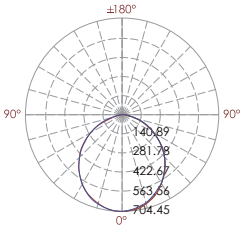

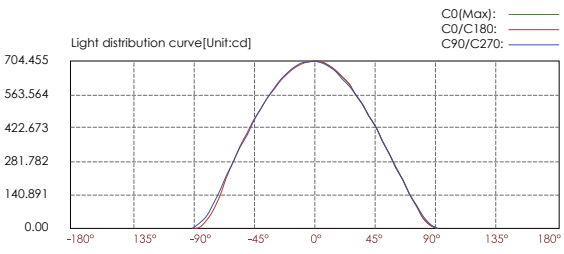

Lux distance cure

Illuminance at a distance

	Center beam LUX	Beam width H	Beam width V
2m	176.11 LUX	5.3m	5.3m
4m	44.03 LUX	10.6m	10.5m
6m	19.57 LUX	15.9m	15.8m
8m	11.01 LUX	21.2m	21.1m
10m	7.04 LUX	26.5m	26.3m
12m	4.89 LUX	31.8m	31.6m

Horiz.Spread: 105.9 Vert.Spread: 105.6

Landscape / Street pole light
B9AYC0170 @19.5W

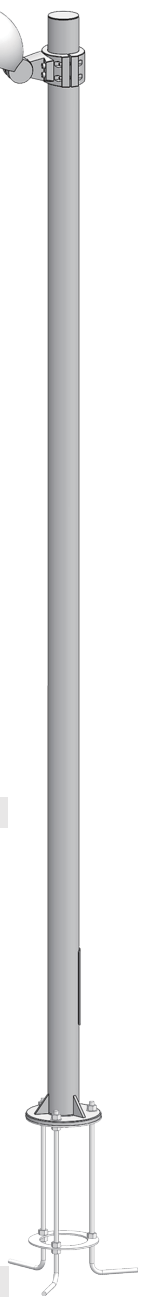

Adjustable Beam Direction

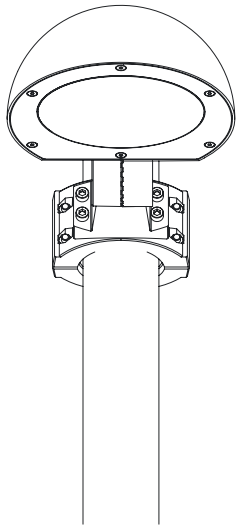

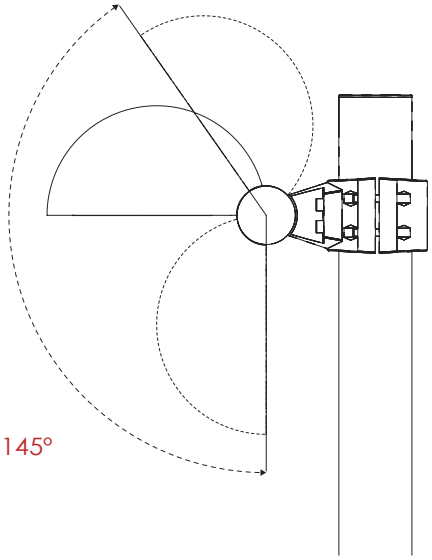

Regular Painting Color

Basic

Sanded Grey
KAL 7042

Secondary

Sanded Black
RAL 9005

Flag Base

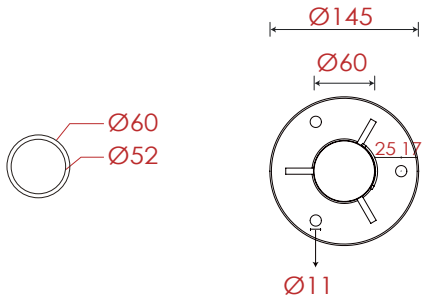

Pole Dimension

Diameter : Ø60mm
Height : 2200mm (Customizeable)
Material : Aluminum

Accessories

Basic

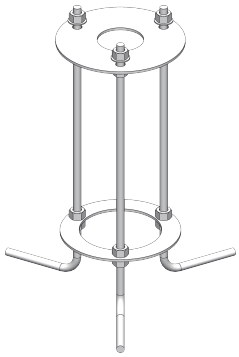

Base Dimension

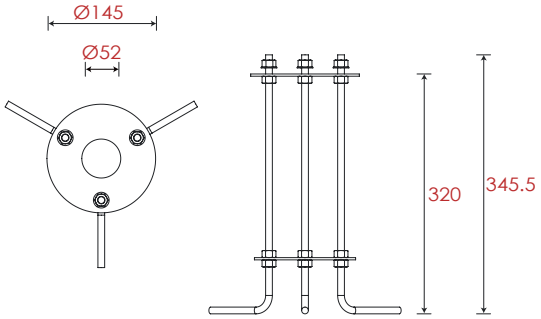

Item	Light Source	Input voltage(V)	Typical operating current(mA)	Typical consumption(W)	Typical luminance(lm)	IK rate
B9AYC0170	18W	240	240V=90	19.5	2054	07

Landscape / Street pole light
B9AYP0170

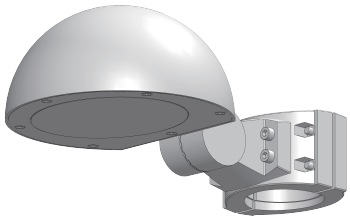

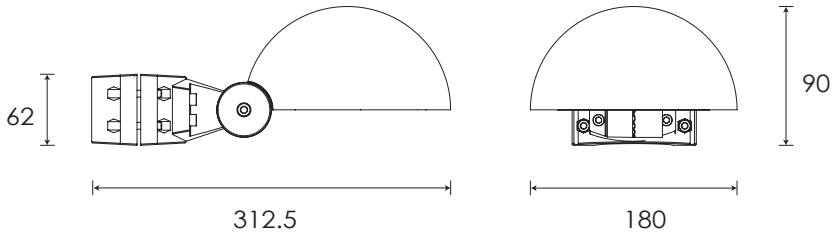

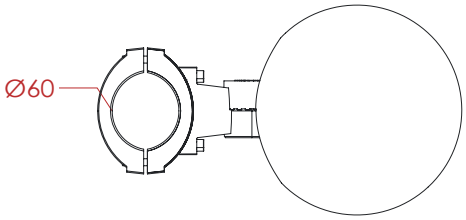

Specification

Housing	12# Die-Casting aluminum finishing or powder painting T=60-80μm.Adhesion of ISO class 1/ASTM class 4B.	**Power Cable**	Outside of luminaire 120V/240V: H05RN-F 3×1.0mm², L=3m
Light Window	Tempered Glass.T=4mm	**Mounting Base**	Powder coated die-casting aluminum
LED Driver	Constant Voltage Input, Constant Current Output	**Dimming Support**	TRIAC PWM Available
LED	NICHIA	**Operating Restrict**	Temperature of environment between -20˚C~40˚C
Lens	Optical lens, efficiency≥85%		

Regular Painting Color

Basic

Sanded Grey
KAL 7042

Secondary

Sanded Black
RAL 9005

Item	Light Source	Input voltage(V)	Typical operating current(mA)	Typical consumption(W)	Typical luminance(lm)	IK rate
B9AYP0170	18W	240	240V=90	19.5	2054	07

Photometric

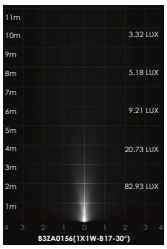

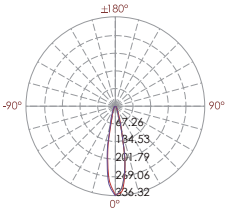

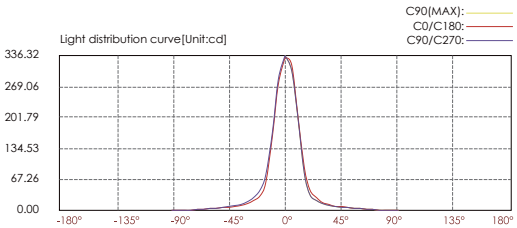

Lux distance curve

Illuminance at a distance

	Center beam LUX	Beam width V	Beam width H
2m	82.93 LUX	0.8m	0.8m
4m	20.73 LUX	1.5m	1.5m
6m	90.21 LUX	2.3m	2.3m
8m	5.18 LUX	3.1m	3.1m
10m	3.32 LUX	3.8m	3.8m
12m	2.30 LUX	4.6m	4.6m

Ver.Spread:21.7 Horiz.Spread:21.7

Landscape / Street pole light
B9AYC0270 @19.5W×2

Adjustable Beam Direction

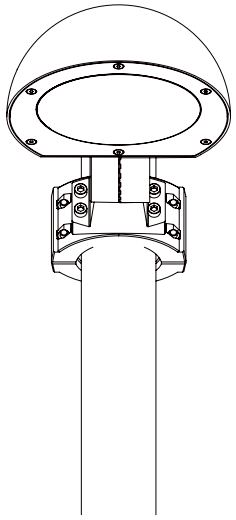

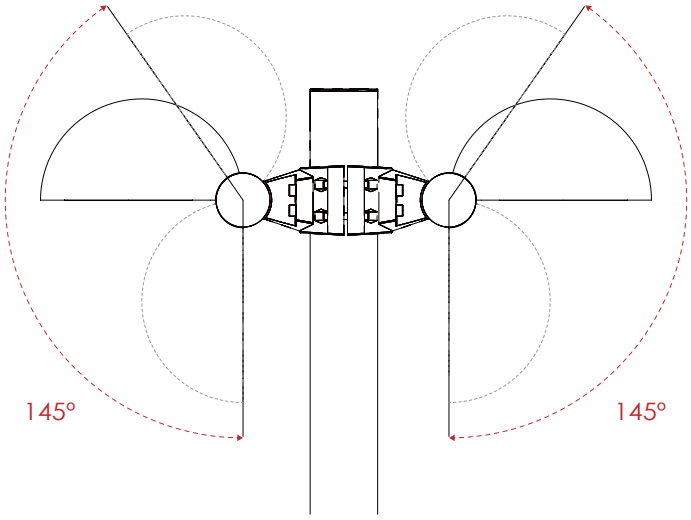

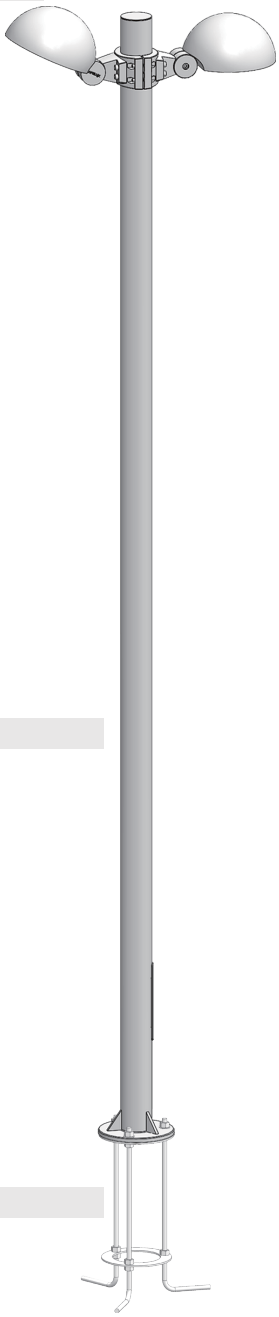

Regular Painting Color

Basic
Sanded Grey
KAL 7042

Secondary
Sanded Black
RAL 9005

Flag Base

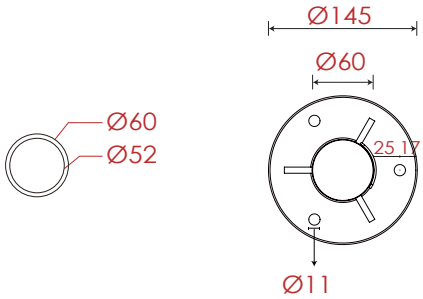

Pole Dimension

Diameter : Ø60mm
Height : 2200mm (Customizeable)
Material : Aluminum

Accessories

Basic

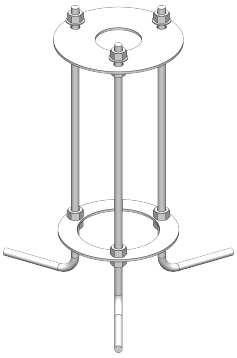

Base Dimension

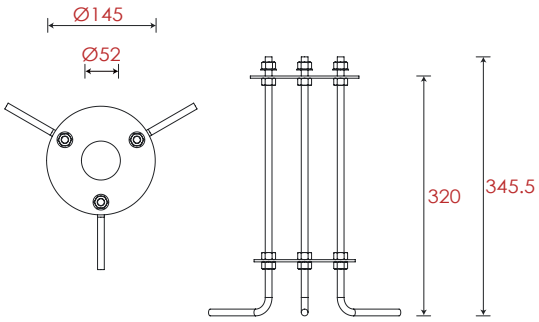

Item	Light Source	Input voltage(V)	Typical operating current(mA)	Typical consumption(W)	Typical luminance(lm)	IK rate
B9AYC0270	18W	240	240V=90 × 2	19.5 × 2	2054 × 2	07

Landscape / Street pole light
B9AYP0170

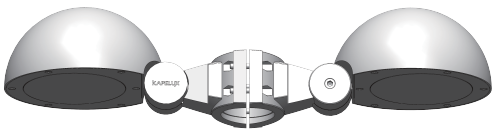

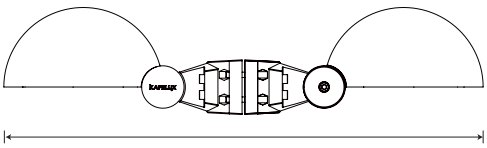

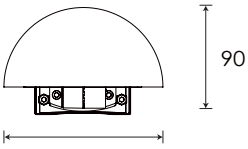

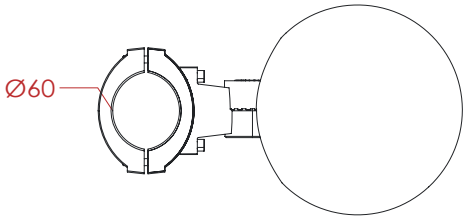

Specification

Housing	12# Die-Casting aluminum finishing or powder painting T=60-80μm.Adhesion of ISO class 1/ASTM class 4B.	**Power Cable**	Outside of luminaire 120V/240V: H05RN-F 3×1.0mm², L=3m
Light Window	Tempered Glass.T=4mm	**Mounting Base**	Powder coated die-casting aluminum
LED Driver	Constant Voltage Input, Constant Current Output	**Dimming Support**	TRIAC PWM Available
LED	NICHIA	**Operating Restrict**	Temperature of environment between -20˚C~40˚C
Lens	Optical lens, efficiency≥85%		

Regular Painting Color

Basic

Sanded Grey
KAL 7042

Secondary

Sanded Black
RAL 9005

Item	Light Source	Input voltage(V)	Typical operating current(mA)	Typical consumption(W)	Typical luminance(lm)	IK rate
B9AYP0170	18W	240	240V=90	19.5	2054	07

Photometric

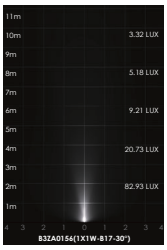

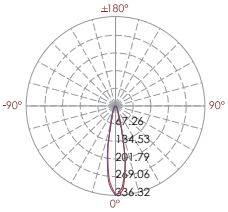

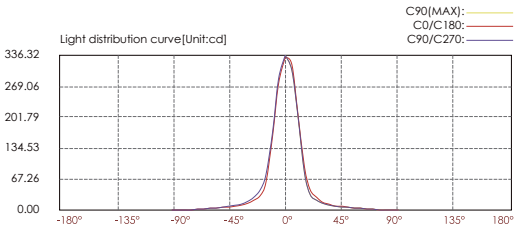

Lux distance curve

Illuminance at a distance

	Center beam LUX	Beam width V	Beam width H
2m	82.93 LUX	0.8m	0.8m
4m	20.73 LUX	1.5m	1.5m
6m	90.21 LUX	2.3m	2.3m
8m	5.18 LUX	3.1m	3.1m
10m	3.32 LUX	3.8m	3.8m
12m	2.30 LUX	4.6m	4.6m

Ver.Spread:21.7 Horiz.Spread:21.7

Landscape / Street pole light
B3BR-1-1

Adjustable Beam Direction

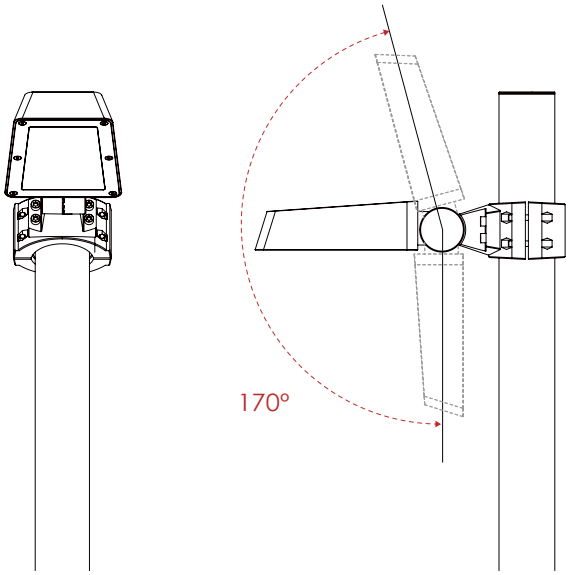

Regular Painting Color

Basic

Sanded Grey
KAL 7042

Secondary

Sanded Black
RAL 9005

Flag Base

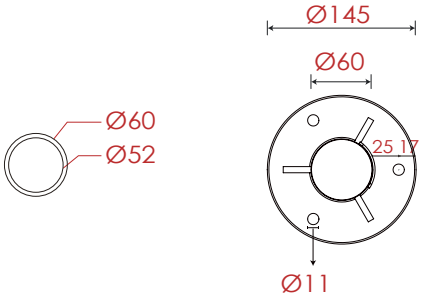

Pole Dimension

Diameter : Ø60mm
Height : 2200mm (Customizeable)
Material : Aluminum

Accessories

Basic

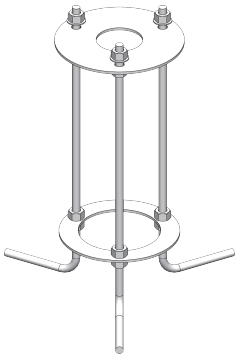

Base Dimension

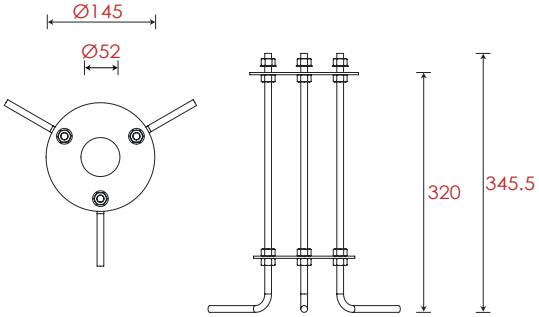

Item	Lens	The manufacturer selected lens degree(°)θ1/2	Input voltage(V)	Typical operating current(mA)	Typical consumption(W)	Typical luminance(lm)	IK rate
B3BR-1-1	B71	24°	120 / 240	120V=71 240V=40	8.6	695	07

Landscape / Street pole light
B9AZ00000

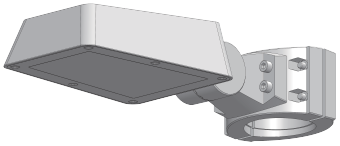

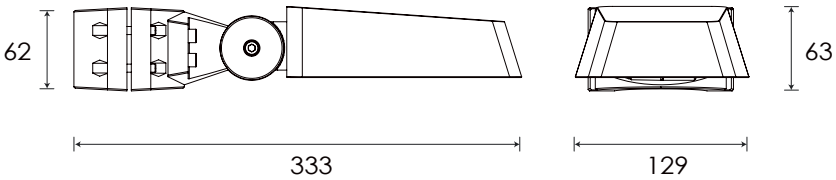

Specification

Housing	12# Die-casting Aluminum Finishing Or Powder Painting T=60-80Mm.adhesion Of Iso Class 1/astm Class 4b	**Led Driver**	Constant Voltage Input, Constant Current Output
Light Window	Tempered Glass.t=3mm	**Power Cable**	Outside Of Luminaire 120v/240v: H05rn-f 3×1.0mm², L=3m
Cable Gland	Ip68 Pg-9 Pa66	**Dimming Support**	Triac Pwm Available 1-10v Dali Customized
Gasket	Tooling Shaped Seal	**Operating Restrict**	Temperature Of Water Between -20˚c~40˚c
Led	Nichia		

Regular Painting Color

Basic

Sanded Grey
KAL 7042

Secondary

Sanded Black
RAL 9005

Lens

Item Code		Referenced Degree(°)Θ1/2			
	B71	**15°**	**24°**	**45°**	**60°**

Item	Light Source	Lens	The manufacturer selected lens degree(°)θ1/2	Input voltage(V)	Typical operating current(mA)	Typical consumption(W)	Typical luminance(lm)	IK rate
B3BRR0126	7W	B71	24°	120 / 240	120V=71 240V=40	8.6	695	07

Photometric

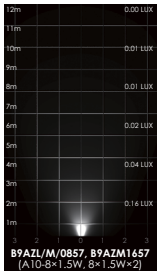

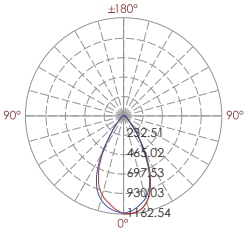

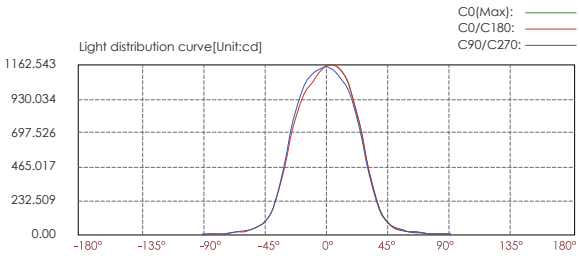

Lux distance cure

Illuminance at a distance

	Center beam LUX	Beam width V	Beam width H
2m	290.04 LUX	2.1m	2.1m
4m	72.51 LUX	4.3m	4.2m
6m	32.23 LUX	6.4m	6.4m
8m	18.13 LUX	8.5m	8.5m
10m	11.60 LUX	10.7m	10.6m
12m	8.06 LUX	12.8m	12.7m

Vert.Spread: 56.1 Horiz.Spread: 55.8

Landscape / Street pole light
B3BR-1-1

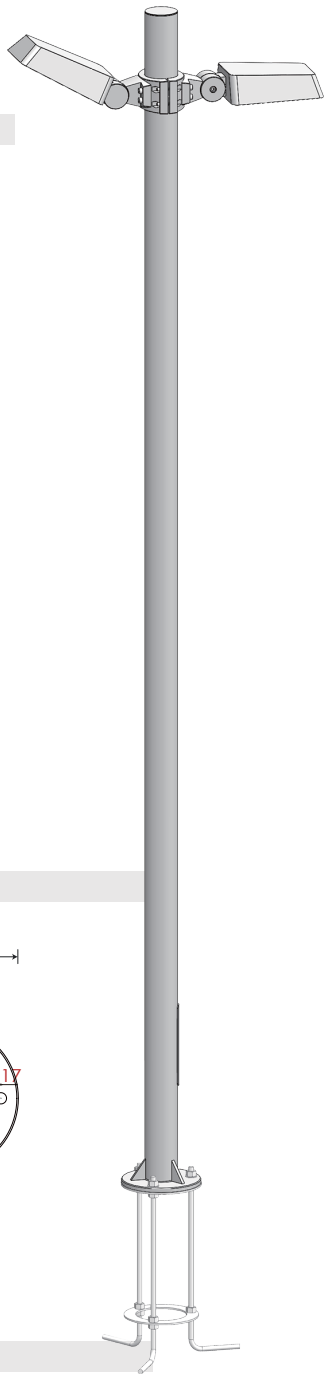

Adjustable Beam Direction

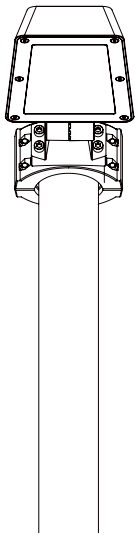

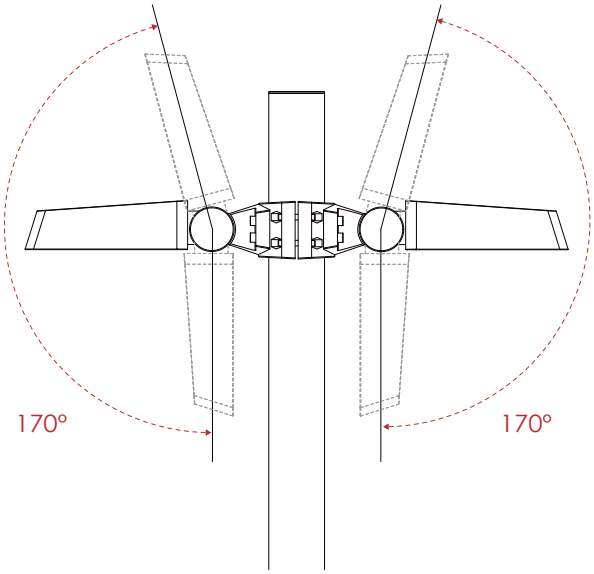

Regular Painting Color

Basic
Sanded Grey
KAL 7042

Secondary
Sanded Black
RAL 9005

Flag Base

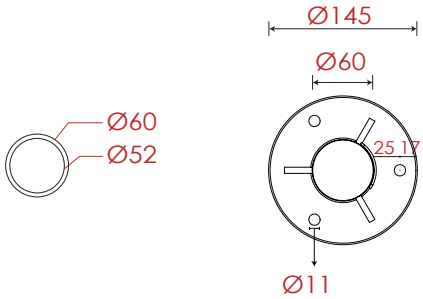

Pole Dimension

Diameter : Ø60mm
Height : 2200mm (Customizeable)
Material : Aluminum

Accessories

Basic

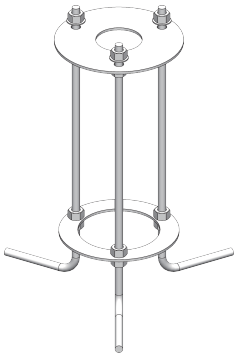

Base Dimension

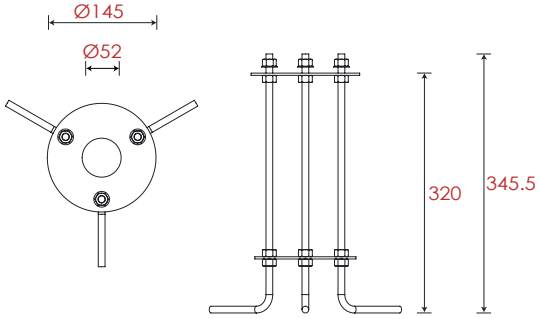

Item	Lens	The manufacturer selected lens degree(°)θ1/2	Input voltage(V)	Typical operating current(mA)	Typical consumption(W)	Typical luminance(lm)	IK rate
B3BR-1-1	B71	24°	120 / 240	120V=71 240V=40	8.6	695	07

Landscape / Street pole light
B3BRR0126

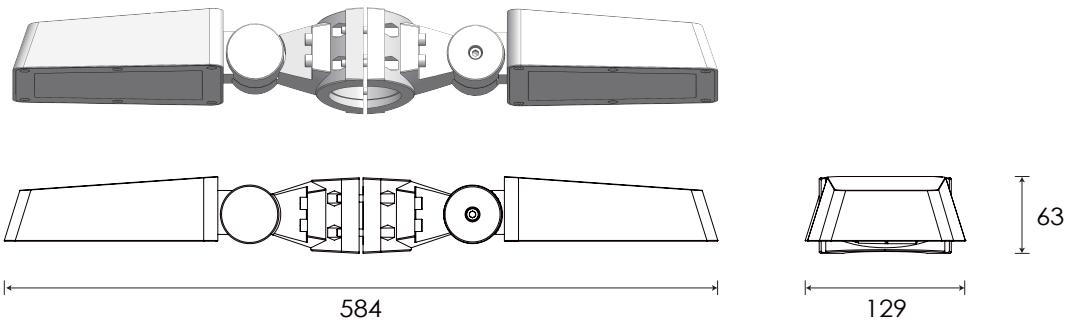

Specification

Housing	12# Die-casting Aluminum Finishing Or Powder Painting T=60-80Mm.adhesion Of Iso Class 1/astm Class 4b	**Led Driver**	Constant Voltage Input, Constant Current Output
Light Window	Tempered Glass.t=3mm	**Power Cable**	Outside Of Luminaire 120v/240v: H05rn-f 3×1.0mm², L=3m
Cable Gland	Ip68 Pg-9 Pa66	**Dimming Support**	Triac Pwm Available 1-10v Dali Customized
Gasket	Tooling Shaped Seal		
Led	Nichia	**Operating Restrict**	Temperature Of Water Between -20˚c~40˚c

Regular Painting Color

Basic

Sanded Grey
KAL 7042

Secondary

Sanded Black
RAL 9005

Lens

Item Code		Referenced Degree(°)Θ1/2			
	B71	**15°**	**24°**	**45°**	**60°**

Item	Light Source	Lens	The manufacturer selected lens degree(°)θ1/2	Input voltage(V)	Typical operating current(mA)	Typical consumption(W)	Typical luminance(lm)	IK rate
B3BRR0126	7W	B71	24°	120 / 240	120V=71 240V=40	8.6	695	07

Photometric

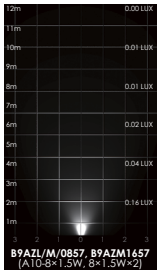

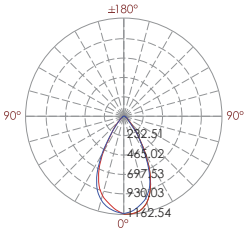

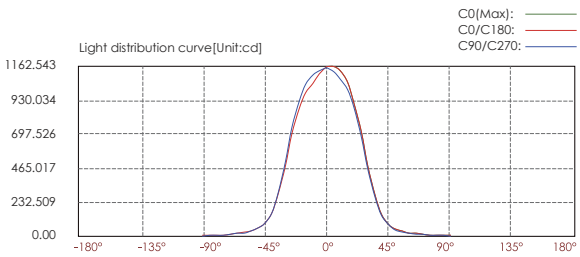

Lux distance cure

Illuminance at a distance

	Center beam LUX	Beam width V	Beam width H
2m	290.04 LUX	2.1m	2.1m
4m	72.51 LUX	4.3m	4.2m
6m	32.23 LUX	6.4m	6.4m
8m	18.13 LUX	8.5m	8.5m
10m	11.60 LUX	10.7m	10.6m
12m	8.06 LUX	12.8m	12.7m

Vert.Spread: 56.1 Horiz.Spread: 55.8

Landscape / Street pole light
B9XM-1-1

Adjustable Beam Direction

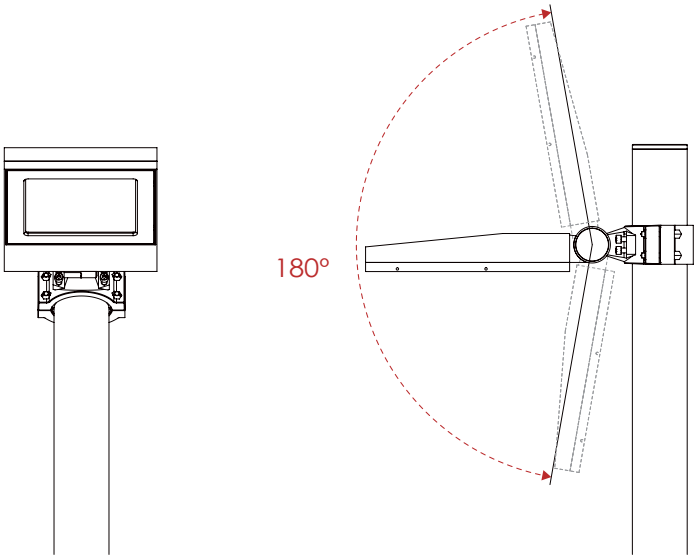

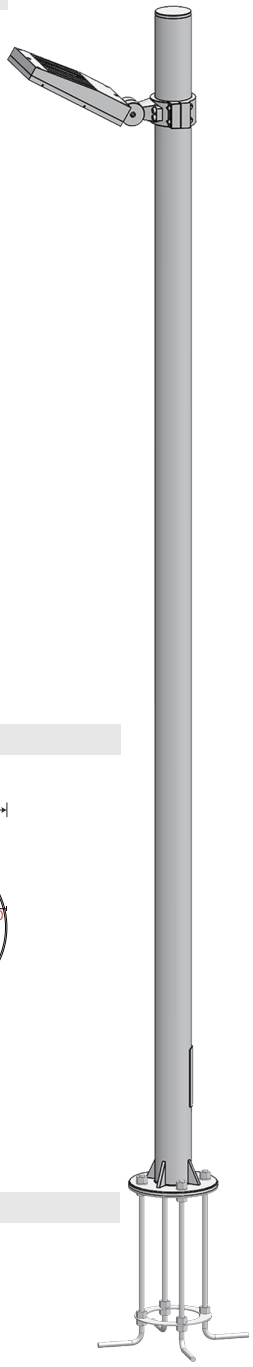

Regular Painting Color

Basic

Sanded Grey
KAL 7042

Secondary

Sanded Black
RAL 9005

Flag Base

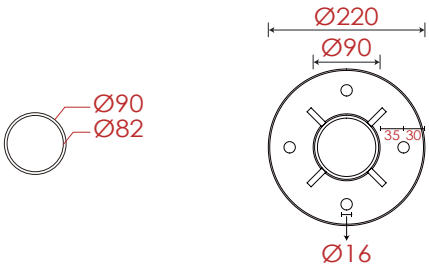

Pole Dimension & Material

Diameter : Ø90mm
Height : 3000mm (Customizeable)
Material : Aluminum

Accessories

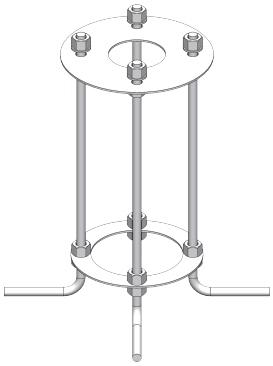

Base Dimension

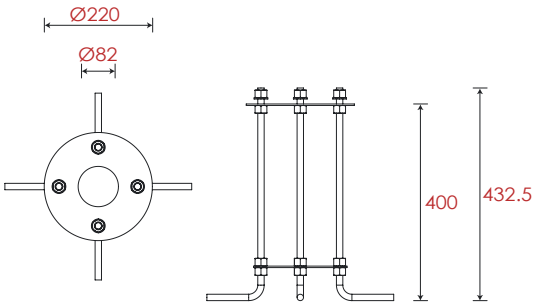

Item	Light Source	Lens	The manufacturer selected lens degree(°)θ1/2	Input voltage(V)	Typical operating current(mA)	Typical consumption(W)	Typical luminance(lm)	IK rate
B9XM-1-1	4 × 3.5W	FB11B4	30°	DC 24 AC 120 AC 240	24V=630 120V=146 240V=73	24V=15 120V=17.5 240V=17	1206	07

Landscape / Street pole light
B9XM00000

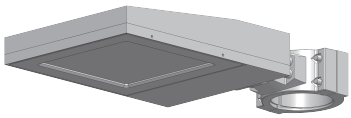

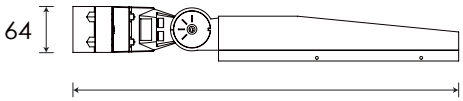

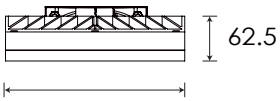

Specification

Housing	12# Die-Casting aluminum finishing or powder painting T=60-80μm.Adhesion of ISO class 1/ASTM class 4B.
Light Window	Tempered Glass.T=4mm
LED Driver	Constant Voltage Input, Constant Current Output
LED	SMD3535
Lens	Optical lens, efficiency≥85%
Power Cable	Outside of luminaire 12V/24V: H05RN-F 2×1.0mm², L=0.3m 120V/240V: H05RN-F 3×1.0mm², L=0.3m
Mounting Base	Powder coated die-casting aluminum
Dimming Support	TRIAC PWM Available 1-10V Dali Customized

Operating Restrict

- Temperature of water between -20˚C~40˚C

Lens

Item Code		Referenced Degree(°)θ1/2					
	FB11B4	**9°**	**15°**	**20°**	**30°**	**45°**	**60°**

Item	Light Source	Lens	The manufacturer selected lens degree(°)θ1/2	Input voltage(V)	Typical operating current(mA)	Typical consumption(W)	Typical luminance(lm)	IK rate
B9XM00000	4 × 3.5W	FB11B4	30°	DC 24 AC 120 AC 240	24V=630 120V=146 240V=73	24V=15 120V=17.5 240V=17	1206	07

Photometric

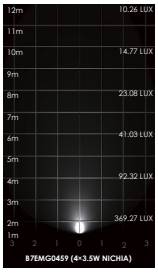

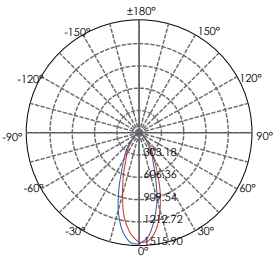

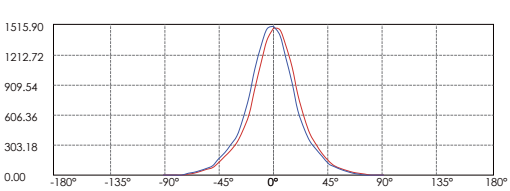

Lux distance Curve

Illuminance at a Distance

	Center Beam LUX	Beam Width V	Beam Width H
2m	369.27 LUX	1.4m	1.4m
4m	92.32 LUX	2.8m	2.8m
6m	41.03 LUX	4.2m	4.3m
8m	23.08 LUX	5.6m	5.7m
10m	14.77 LUX	7.0m	7.1m
12m	10.26 LUX	8.4m	8.5m

Vert.Spread:38.6 Horiz.Spread:39.0

Landscape / Street pole light
B9XM-1-1

Adjustable Beam Direction

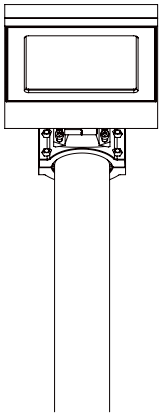

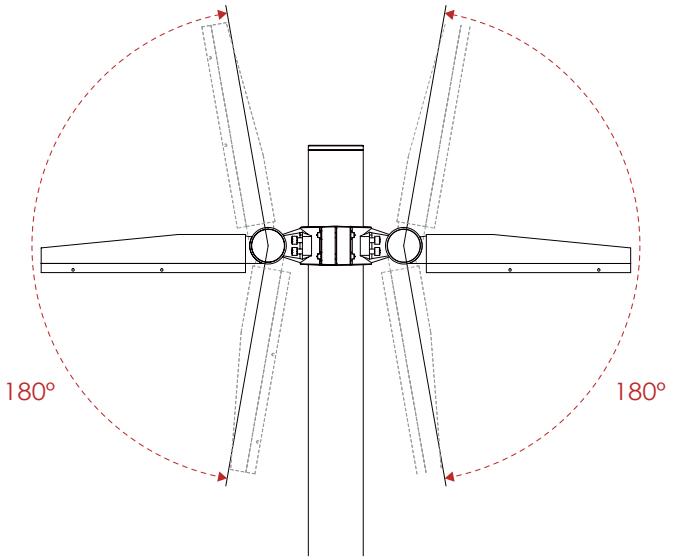

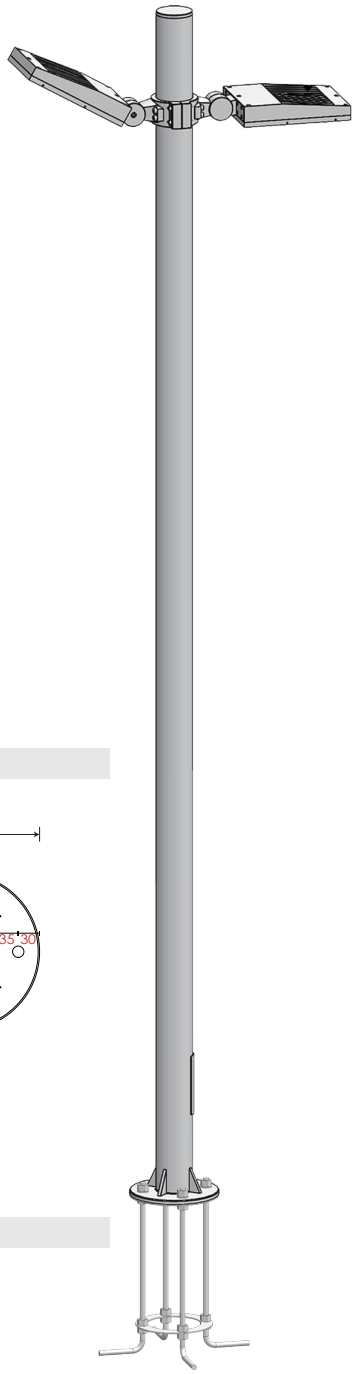

Regular Painting Color

Basic

Sanded Grey
KAL 7042

Secondary

Sanded Black
RAL 9005

Flag Base

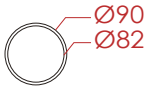

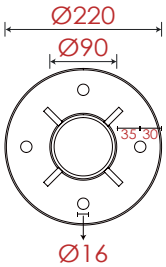

Pole Dimension & Material

Diameter : Ø90mm
Height : 3000mm (Customizeable)
Material : Aluminum

Accessories

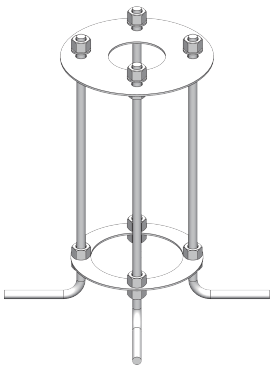

Base Dimension

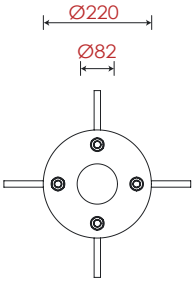

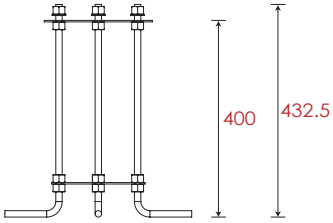

Item	Light Source	Lens	The manufacturer selected lens degree(°)θ1/2	Input voltage(V)	Typical operating current(mA)	Typical consumption(W)	Typical luminance(lm)	IK rate
B9XM-1-1	4 × 3.5W × 2	FB11B4	N/A	DC 24 AC 120 AC 240	24V=630 × 2 120V=146 × 2 240V=73 × 2	24V=15 × 2 120V=17.5 × 2 240V=17 × 2	1206 × 2	07

Landscape / Street pole light
B9XM00000

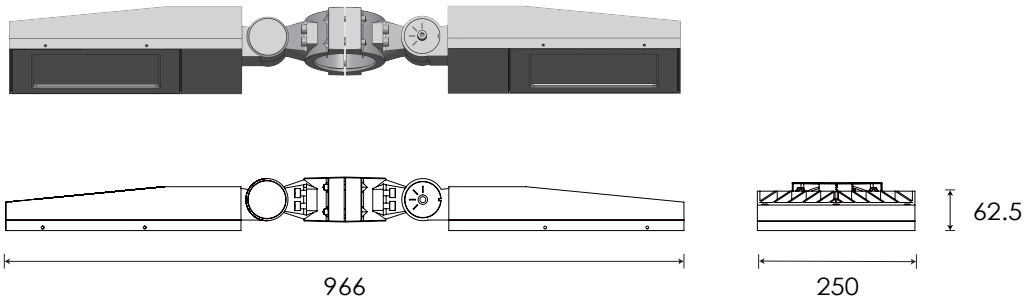

Specification

Housing	12# Die-Casting aluminum finishing or powder painting T=60-80μm.Adhesion of ISO class 1/ASTM class 4B.
Light Window	Tempered Glass.T=4mm
LED Driver	Constant Voltage Input, Constant Current Output
LED	SMD3535
Lens	Optical lens, efficiency≥85%
Power Cable	Outside of luminaire 12V/24V: H05RN-F 2×1.0mm², L=0.3m 120V/240V: H05RN-F 3×1.0mm², L=0.3m
Mounting Base	Powder coated die-casting aluminum
Dimming Support	TRIAC PWM Available 1-10V Dali Customized

Operating Restrict

- Temperature of water between -20˚C~40˚C

Lens

Item Code		Referenced Degree(°)θ1/2					
	FB11B4	**9°**	**15°**	**20°**	**30°**	**45°**	**60°**

Item	Light Source	Lens	The manufacturer selected lens degree(°)θ1/2	Input voltage(V)	Typical operating current(mA)	Typical consumption(W)	Typical luminance(lm)	IK rate
B9XM00000	4 × 3.5W × 2	FB11B4	N/A	DC 24 AC 120 AC 240	24V=630 x 2 120V=146 x 2 240V=73 x 2	24V=15 x 2 120V=17.5 x 2 240V=17 x 2	1206 x 2	07

Photometric

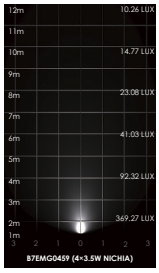

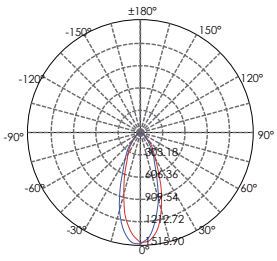

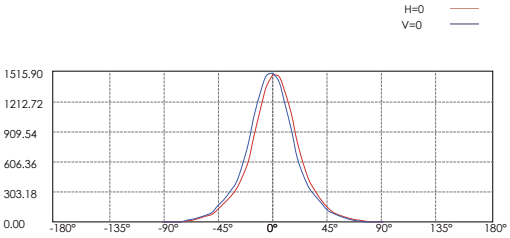

Lux distance Curve

Illuminance at a Distance

	Center Beam LUX	Beam Width V	Beam Width H
2m	369.27 LUX	1.4m	1.4m
4m	92.32 LUX	2.8m	2.8m
6m	41.03 LUX	4.2m	4.3m
8m	23.08 LUX	5.6m	5.7m
10m	14.77 LUX	7.0m	7.1m
12m	10.26 LUX	8.4m	8.5m

Vert.Spread:38.6 Horiz.Spread:39.0

Landscape / Street pole light
B9YM-1-1

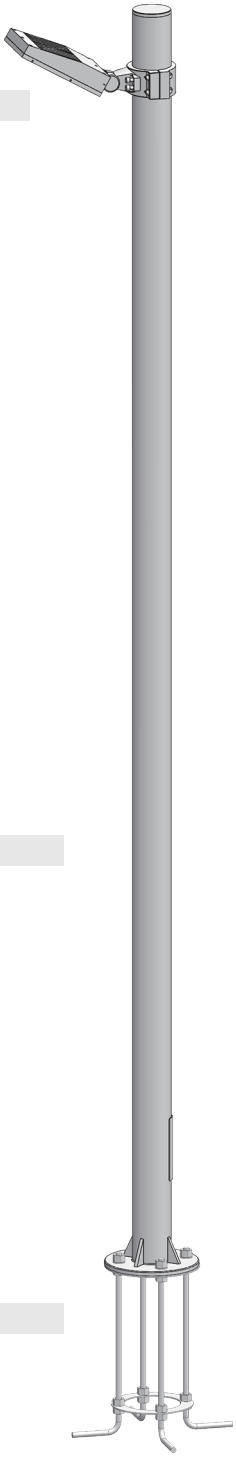

Adjustable Beam Direction

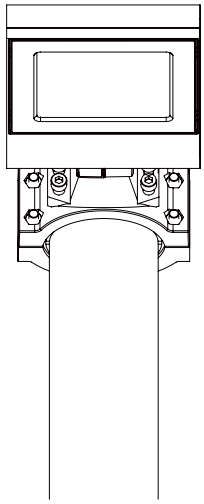

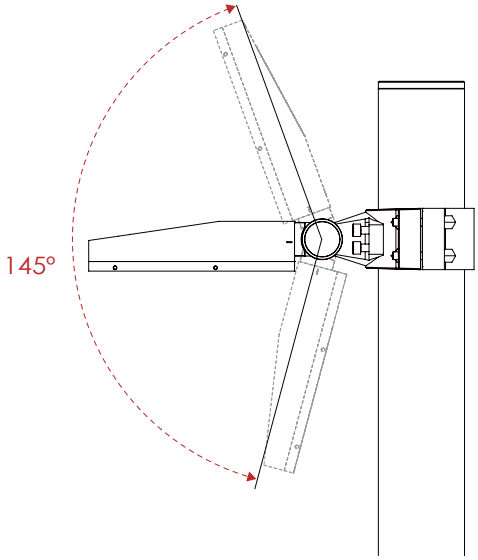

Regular Painting Color

Basic
Sanded Grey
KAL 7042

Secondary
Sanded Black
RAL 9005

Flag Base

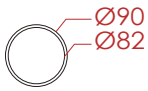

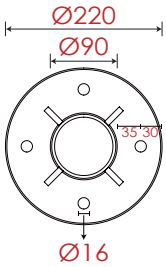

Pole Dimension & Material

Diameter : Ø90mm
Height : 3000mm (Customizeable)
Material : Aluminum

Accessories

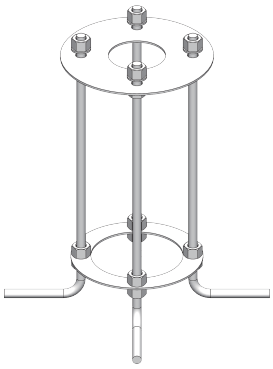

Base Dimension

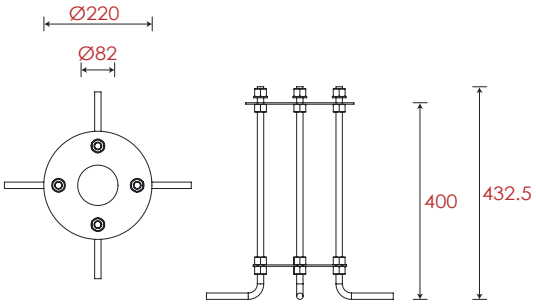

Item	Light Source	Lens	The manufacturer selected lens degree(°)θ1/2	Input voltage(V)	Typical operating current(mA)	Typical consumption(W)	Typical luminance(lm)	IK rate
B9YM-1-1	4 × 3.5W	FB11B4	30°	DC 24 AC 120 AC 240	24V=630 120V=146 240V=73	24V=15 120V=17.5 240V=17	1206	07

Landscape / Street pole light
B3YM00000

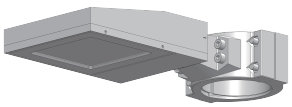

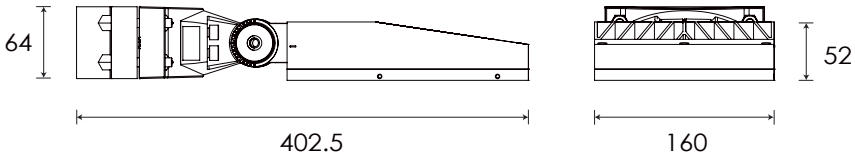

Specification

Housing	12# Die-Casting aluminum finishing or powder painting T=60-80μm.Adhesion of ISO class 1/ASTM class 4B.
Light Window	Tempered Glass.T=4mm
LED Driver	Constant Voltage Input, Constant Current Output
LED	SMD3535
Lens	Optical lens, efficiency≥85%
Power Cable	Outside of luminaire 12V/24V: H05RN-F 2×1.0mm², L=0.3m 120V/240V: H05RN-F 3×1.0mm², L=0.3m
Mounting Base	Powder coated die-casting aluminum
Dimming Support	TRIAC PWM Available 1-10V Dali Customized

Operating Restrict

- Temperature of water between -20˚C~40˚C

Lens

Item Code		Referenced Degree(°)θ1/2					
	FB11B4	**9°**	**15°**	**20°**	**30°**	**45°**	**60°**

Item	Light Source	Lens	The manufacturer selected lens degree(°)θ1/2	Input voltage(V)	Typical operating current(mA)	Typical consumption(W)	Typical luminance(lm)	IK rate
B9YM00000	4 × 3.5W	FB11B4	30°	DC 24 AC 120 AC 240	24V=630 120V=146 240V=73	24V=15 120V=17.5 240V=17	1206	07

Photometric

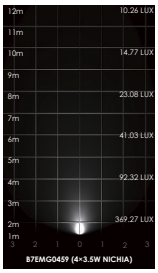

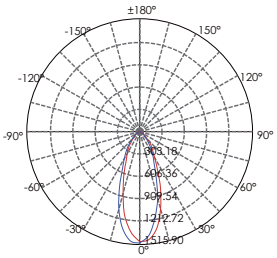

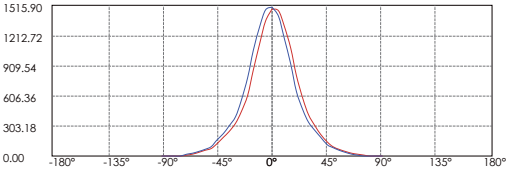

Lux distance Curve

Illuminance at a Distance

	Center Beam LUX	Beam Width V	Beam Width H
2m	369.27 LUX	1.4m	1.4m
4m	92.32 LUX	2.8m	2.8m
6m	41.03 LUX	4.2m	4.3m
8m	23.08 LUX	5.6m	5.7m
10m	14.77 LUX	7.0m	7.1m
12m	10.26 LUX	8.4m	8.5m

Vert.Spread:38.6 Horiz.Spread:39.0

Landscape / Street pole light
B3YM00000

Adjustable Beam Direction

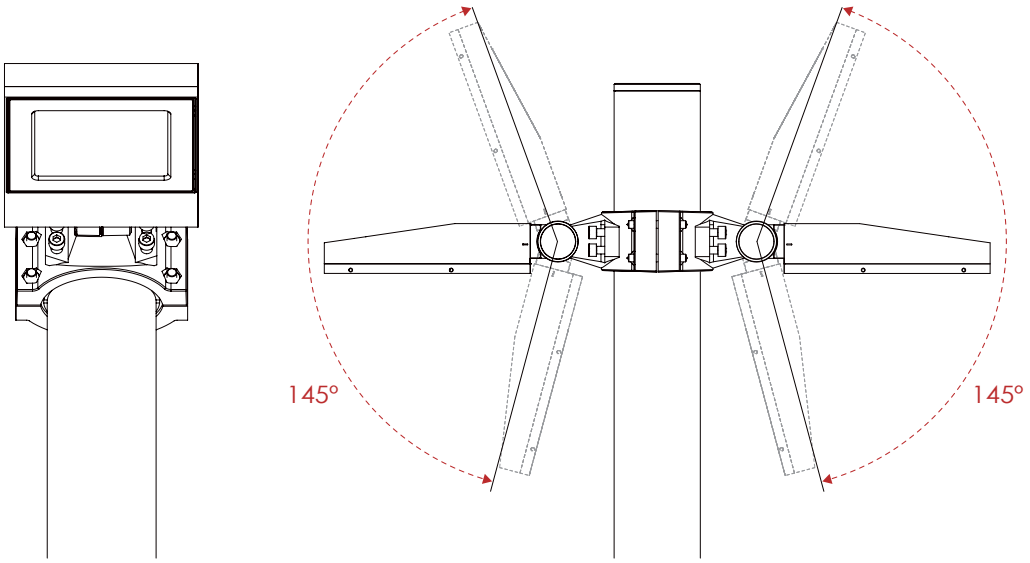

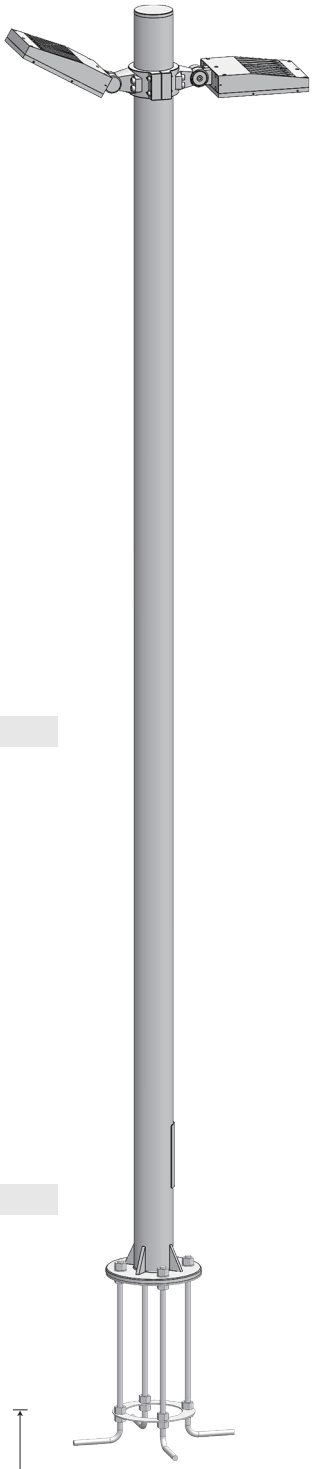

Regular Painting Color

Basic
Sanded Grey
KAL 7042

Secondary
Sanded Black
RAL 9005

Flag Base

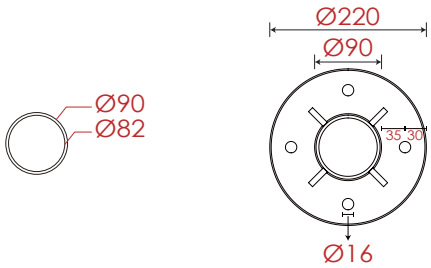

Pole Dimension & Material

Diameter : Ø90mm
Height : 3000mm (Customizeable)
Material : Aluminum

Accessories

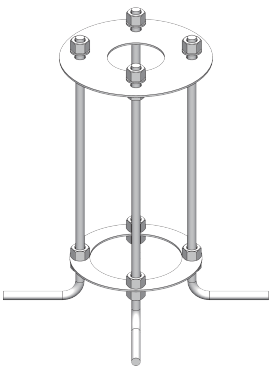

Base Dimension

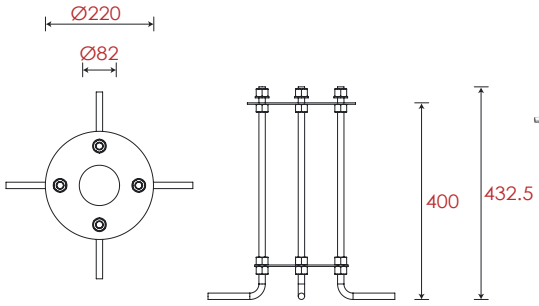

Item	Light Source	Lens	The manufacturer selected lens degree(°)θ1/2	Input voltage(V)	Typical operating current(mA)	Typical consumption(W)	Typical luminance(lm)	IK rate
B9YM-2-1	4 × 3.5W × 2	FB11B4	N/A	DC 24 AC 120 AC 240	24V=630 × 2 120V=146 × 2 240V=73 × 2	24V=15 × 2 120V=17.5 × 2 240V=17 × 2	1206 × 2	07

Landscape / Street pole light
B9YM00000

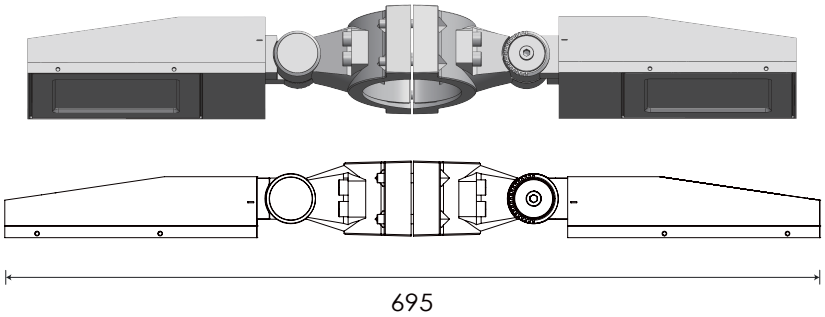

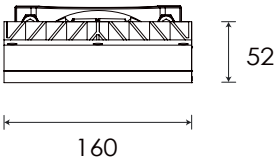

Specification

Housing	12# Die-Casting aluminum finishing or powder painting T=60-80μm.Adhesion of ISO class 1/ASTM class 4B.	**Power Cable**	Outside of luminaire 12V/24V: H05RN-F 2×1.0mm², L=0.3m 120V/240V: H05RN-F 3×1.0mm², L=0.3m
Light Window	Tempered Glass.T=4mm	**Mounting Base**	Powder coated die-casting aluminum
LED Driver	Constant Voltage Input, Constant Current Output	**Dimming Support**	TRIAC PWM Available 1-10V Dali Customized
LED	SMD3535		
Lens	Optical lens, efficiency≥85%		

Operating Restrict

- Temperature of water between -20˚C~40˚C

Lens

Item Code		Referenced Degree(°)θ1/2					
	FB11B4	**9°**	**15°**	**20°**	**30°**	**45°**	**60°**

Item	Light Source	Lens	The manufacturer selected lens degree(°)θ1/2	Input voltage(V)	Typical operating current(mA)	Typical consumption(W)	Typical luminance(lm)	IK rate
B9YM00000	4 × 3.5W × 2	FB11B4	N/A	DC 24 AC 120 AC 240	24V=630 × 2 120V=146 × 2 240V=73 × 2	24V=15 × 2 120V=17.5 × 2 240V=17 × 2	1206 × 2	07

Photometric

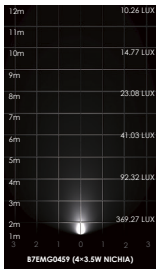

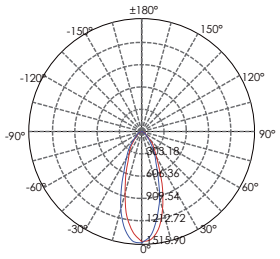

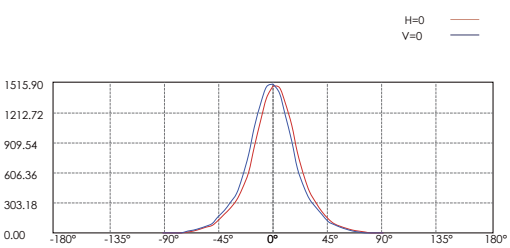

Lux distance Curve

Illuminance at a Distance

	Center Beam LUX	Beam Width V	Beam Width H
2m	369.27 LUX	1.4m	1.4m
4m	92.32 LUX	2.8m	2.8m
6m	41.03 LUX	4.2m	4.3m
8m	23.08 LUX	5.6m	5.7m
10m	14.77 LUX	7.0m	7.1m
12m	10.26 LUX	8.4m	8.5m

Vert.Spread:38.6 Horiz.Spread:39.0

Landscape / Street pole light
B9FMC0958 @9x3W

Adjustable Beam Direction

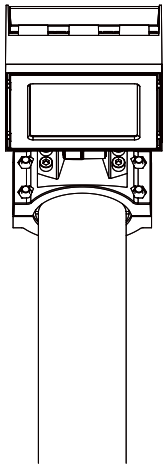

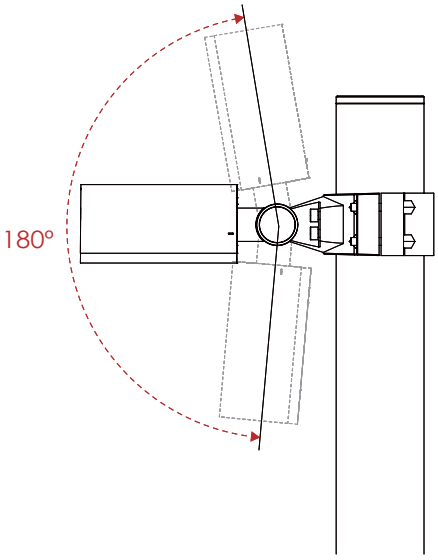

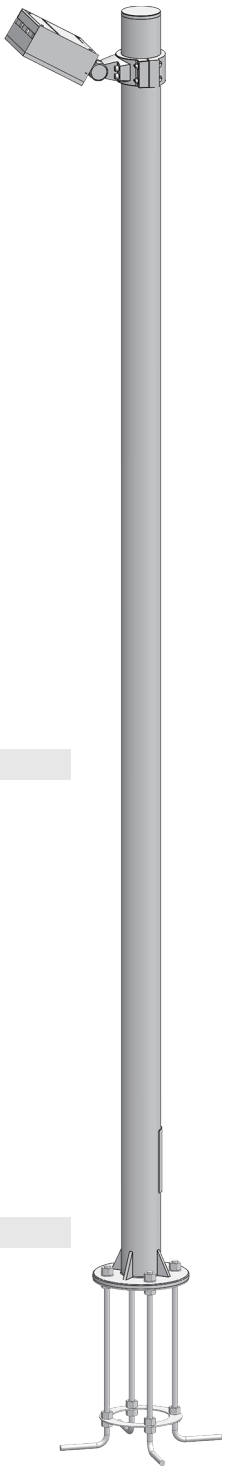

Regular Painting Color

Basic

Sanded Grey
KAL 7042

Secondary

Sanded Black
RAL 9005

Flag Base

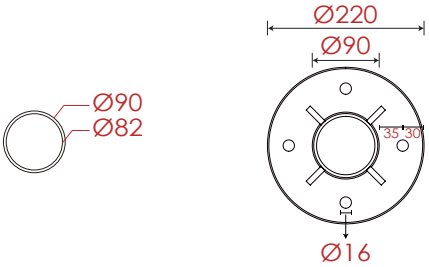

Pole Dimension & Material

Diameter : Ø90mm
Height : 3000mm (Customizeable)
Material : Aluminum

Accessories

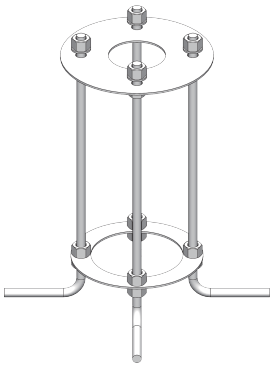

Base Dimension

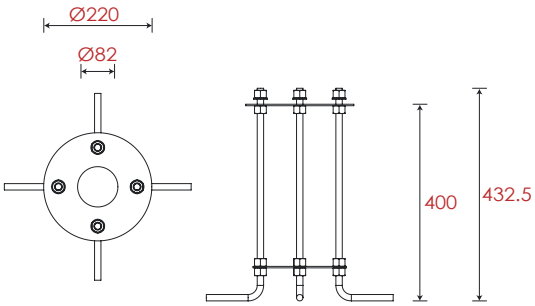

Item	Light Source	Lens	The manufacturer selected lens degree(°)θ1/2	Input voltage(V)	Typical operating current(mA)	Typical consumption(W)	Typical luminance(lm)	IK rate
B9FMC0958	9 × 3W	FB12B5	9°	DC 24 AC 120 AC 240	24V=1375 120V=245 240V=133	24V=33 120V=29.6 240V=30	2632	07

Landscape / Street pole light
B3FMP0958

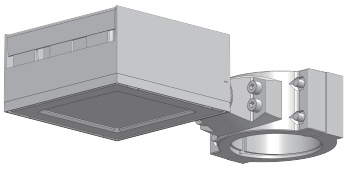

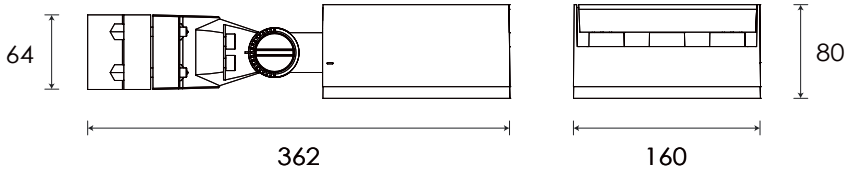

Specification

Housing	12# Die-Casting aluminum finishing or powder painting T=60-80μm.Adhesion of ISO class 1/ASTM class 4B.	**Power Cable**	Outside of luminaire 12V/24V: H05RN-F 2×1.0mm², L=0.3m 120V/240V: H05RN-F 3×1.0mm², L=0.3m
Light Window	Tempered Glass.T=4mm	**Mounting Base**	Powder coated die-casting aluminum
LED Driver	Constant Voltage Input, Constant Current Output	**Dimming Support**	TRIAC PWM Available 1-10V Dali Customized
LED	SMD3535		
Lens	Optical lens, efficiency≥85%		

Operating Restrict

- Temperature of water between -20˚C~40˚C

Lens

Item Code		Referenced Degree(°)θ1/2					
	FB12B5	**9°**	**15°**	**20°**	**30°**	**45°**	**60°**

Itetem	Light Source	Lens	The manufacturer selected lens degree(°)θ1/2	Input voltage(V)	Typical operating current(mA)	Typical consumption(W)	Typical luminance(lm)	IK rate
B9FMP0958	9 × 3W	FB12B5	9°	DC 24 AC 120 AC 240	24V=1375 120V=245 240V=133	24V=33 120V=29.6 240V=30	2632	07

Photometric

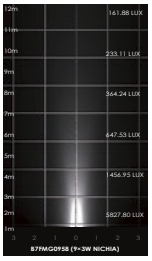

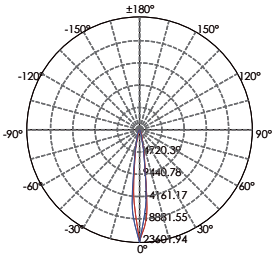

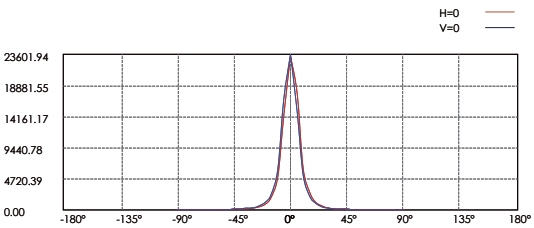

Lux distance Curve

Illuminance at a Distance

	Center Beam LUX	Beam Width V	Beam Width H
2m	5827.80 LUX	0.5m	0.5m
4m	1456.95 LUX	1.0m	1.0m
6m	647.53 LUX	1.5m	1.5m
8m	364.24 LUX	2.0m	2.0m
10m	233.11 LUX	2.4m	2.4m
12m	161.88 LUX	2.9m	2.9m

Vert.Spread:14.0 Horiz.Spread:14.0

Landscape / Street pole light
B9FMC1858 @9x3Wx2

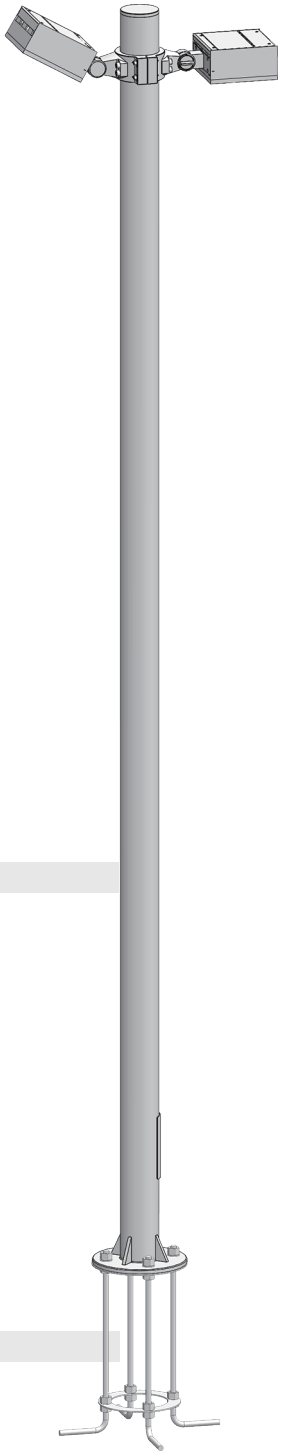

Adjustable Beam Direction

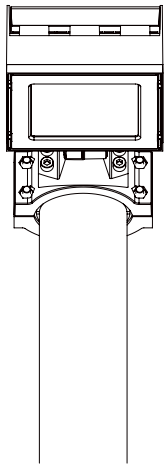

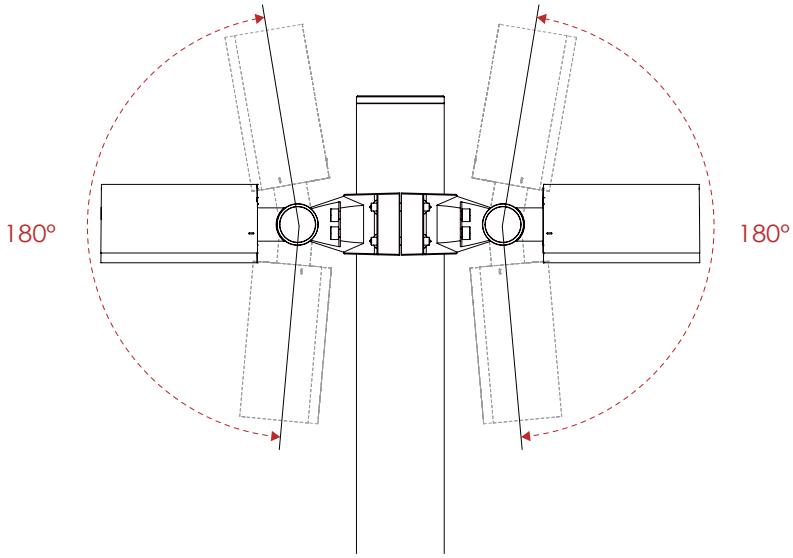

Regular Painting Color

Basic

Sanded Grey
KAL 7042

Secondary

Sanded Black
RAL 9005

Flag Base

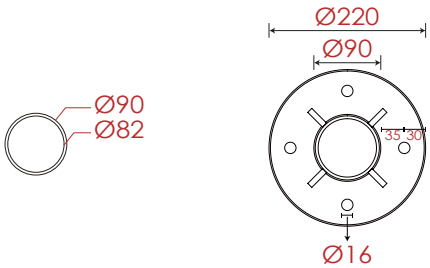

Pole Dimension & Material

Diameter : Ø90mm
Height : 3000mm (Customizeable)
Material : Aluminum

Accessories

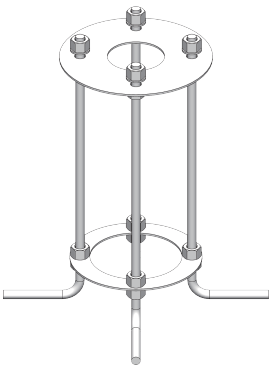

Base Dimension

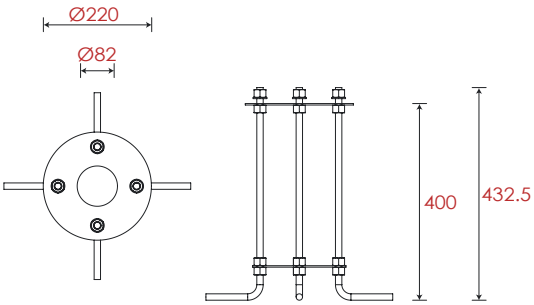

Item	Light Source	Lens	The manufacturer selected lens degree(°)θ1/2	Input voltage(V)	Typical operating current(mA)	Typical consumption(W)	Typical luminance(lm)	IK rate
B9FMC1858	9 × 3W × 2	FB12B5	N/A	DC 24 AC 120 AC 240	24V=1375 × 2 120V=245 × 2 240V=133 × 2	24V=33 × 2 120V=29.6 × 2 240V=30 × 2	2632 × 2	07

Landscape / Street pole light
B3FMP1858

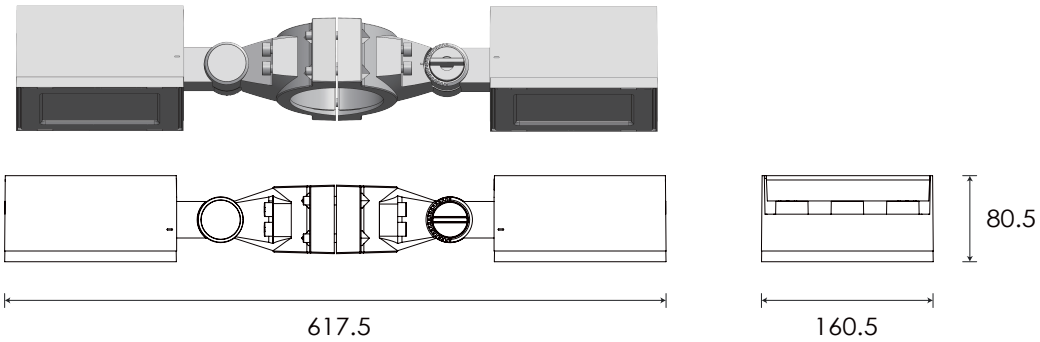

Specification

Housing	12# Die-Casting aluminum finishing or powder painting T=60-80μm.Adhesion of ISO class 1/ASTM class 4B.
Light Window	Tempered Glass.T=4mm
LED Driver	Constant Voltage Input, Constant Current Output
LED	SMD3535
Lens	Optical lens, efficiency≥85%
Power Cable	Outside of luminaire 12V/24V: H05RN-F 2×1.0mm², L=0.3m 120V/240V: H05RN-F 3×1.0mm², L=0.3m
Mounting Base	Powder coated die-casting aluminum
Dimming Support	TRIAC PWM Available 1-10V Dali Customized

Operating Restrict

- Temperature of water between -20˚C~40˚C

Lens

Item Code		Referenced Degree(°)θ1/2					
	FB12B5	**9°**	**15°**	**20°**	**30°**	**45°**	**60°**

Itetem	Light Source	Lens	The manufacturer selected lens degree(°)θ1/2	Input voltage(V)	Typical operating current(mA)	Typical consumption(W)	Typical luminance(lm)	IK rate
B9FMP1858	9 × 3W × 2	FB12B5	N/A	DC 24 AC 120 AC 240	24V=1375 × 2 120V=245 × 2 240V=133 × 2	24V=33 × 2 120V=29.6 × 2 240V=30 × 2	2632 × 2	07

Photometric

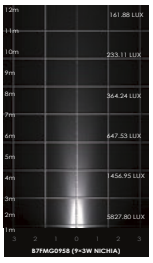

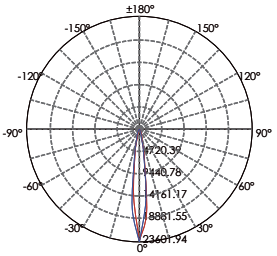

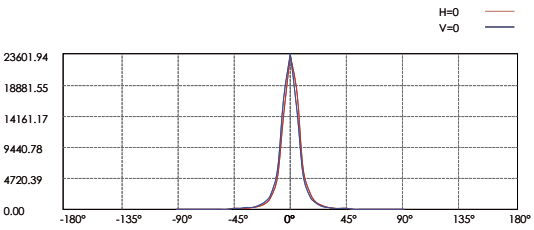

Lux distance Curve

Illuminance at a Distance

	Center Beam LUX	Beam Width V	Beam Width H
2m	5827.80 LUX	0.5m	0.5m
4m	1456.95 LUX	1.0m	1.0m
6m	647.53 LUX	1.5m	1.5m
8m	364.24 LUX	2.0m	2.0m
10m	233.11 LUX	2.4m	2.4m
12m	161.88 LUX	2.9m	2.9m

Vert.Spread:14.0 Horiz.Spread:14.0

Landscape / Street pole light
B9EMC0459 @4×3.5W

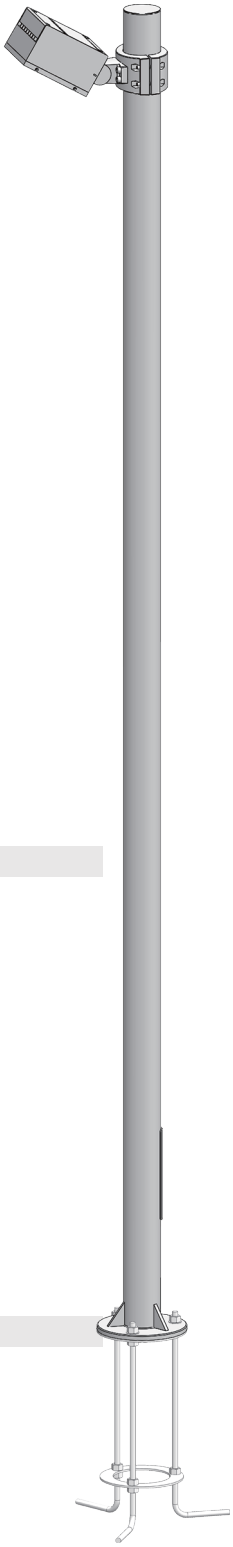

Adjustable Beam Direction

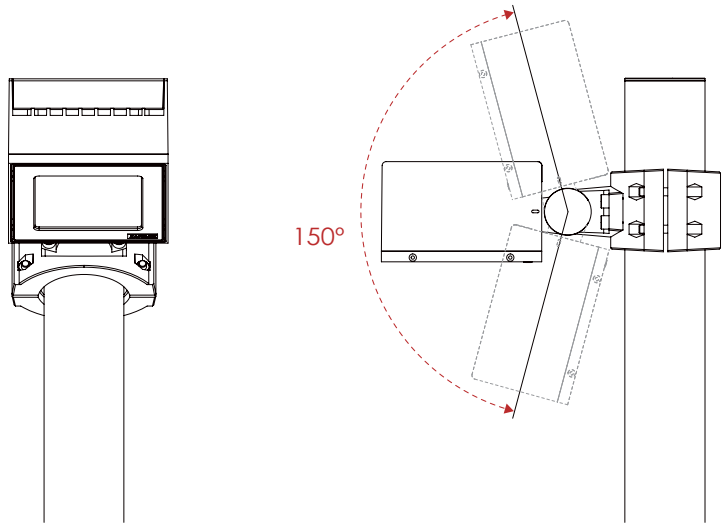

Regular Painting Color

Basic

Sanded Grey
KAL 7042

Secondary

Sanded Black
RAL 9005

Flag Base

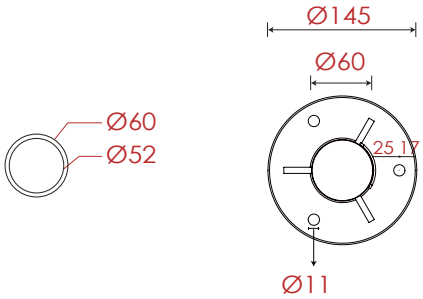

Pole Dimension

Diameter : Ø60mm
Height : 2200mm (Customizeable)
Material : Aluminum

Accessories

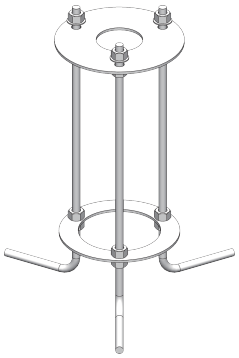

Base Dimension

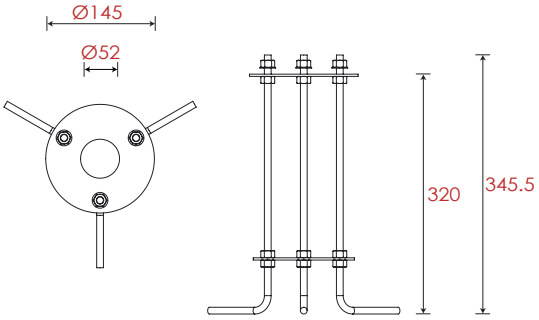

Item	Light Source	Lens	The manufacturer selected lens degree(°)θ1/2	Input voltage(V)	Typical operating current(mA)	Typical consumption(W)	Typical luminance(lm)	IK rate
B9EMC0459	4 × 3.5W	FB11B4	30°	DC 24 AC 120 AC 240	24V=630 120V=146 240V=73	24V=15 120V=17.5 240V=17	1206	07

Landscape / Street pole light
B9EMP0459

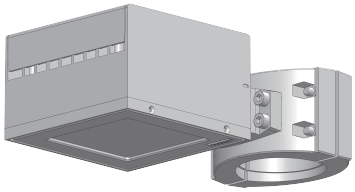

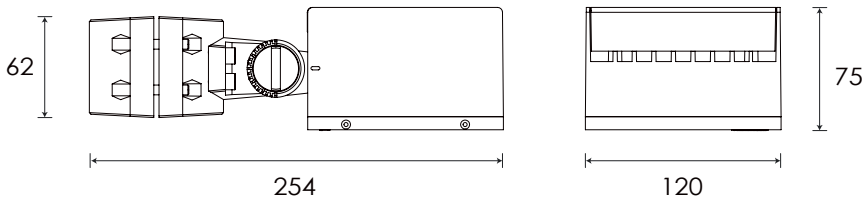

Specification

Housing	12# Die-Casting aluminum finishing or powder painting T=60-80μm.Adhesion of ISO class 1/ASTM class 4B.
Light Window	Tempered Glass.T=4mm
LED Driver	Constant Voltage Input, Constant Current Output
LED	SMD3535
Lens	Optical lens, efficiency≥85%
Power Cable	Outside of luminaire 12V/24V: H05RN-F 2×1.0mm², L=0.3m 120V/240V: H05RN-F 3×1.0mm², L=0.3m
Mounting Base	Powder coated die-casting aluminum
Dimming Support	TRIAC PWM Available 1-10V Dali Customized

Operating Restrict

- Temperature of water between -20˚C~40˚C

Lens

Item Code		Referenced Degree(°)θ1/2					
	FB11B4	**9°**	**15°**	**20°**	**30°**	**45°**	**60°**

Item	Light Source	Lens	The manufacturer selected lens degree(°)θ1/2	Input voltage(V)	Typical operating current(mA)	Typical consumption(W)	Typical luminance(lm)	IK rate
B9EMP0459	4 × 3.5W	FB11B4	30°	DC 24 AC 120 AC 240	24V=630 120V=146 240V=73	24V=15 120V=17.5 240V=17	1206	07

Photometric

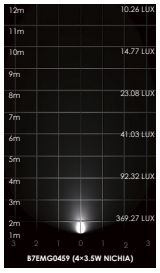

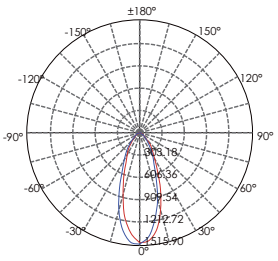

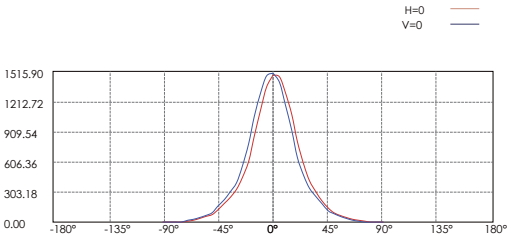

Lux distance Curve

Illuminance at a Distance

	Center Beam LUX	Beam Width V	Beam Width H
2m	369.27 LUX	1.4m	1.4m
4m	92.32 LUX	2.8m	2.8m
6m	41.03 LUX	4.2m	4.3m
8m	23.08 LUX	5.6m	5.7m
10m	14.77 LUX	7.0m	7.1m
12m	10.26 LUX	8.4m	8.5m

Vert.Spread:38.6 Horiz.Spread:39.0

Landscape / Street pole light
B9EMP0459

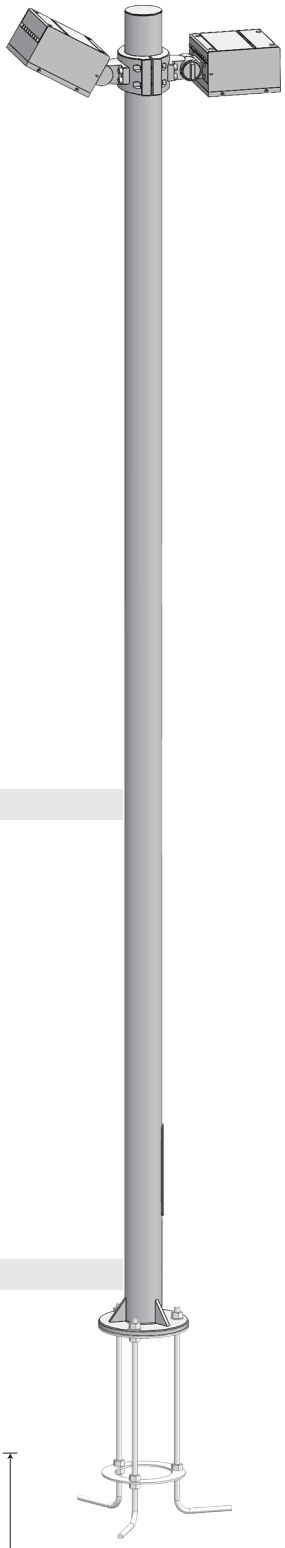

Adjustable Beam Direction

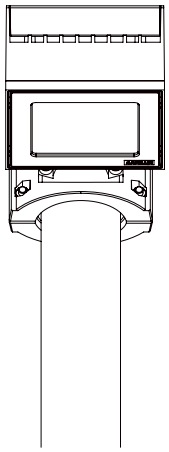

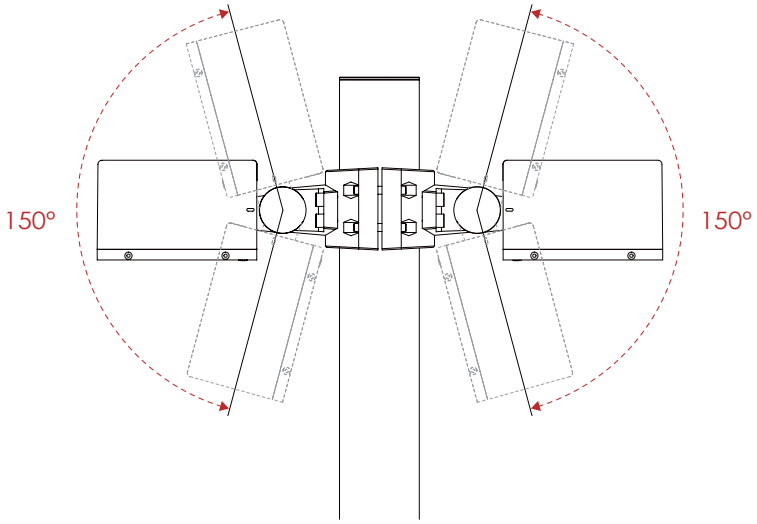

B9EMC0859 @4×3.5W

Regular Painting Color

Basic
Sanded Grey
KAL 7042

Secondary
Sanded Black
RAL 9005

Flag Base

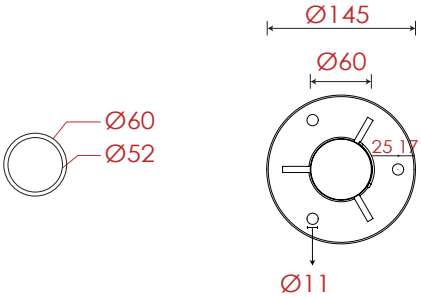

Pole Dimension

Diameter : Ø60mm
Height : 2200mm (Customizeable)
Material : Aluminum

Accessories

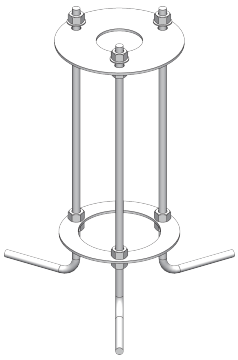

Base Dimension

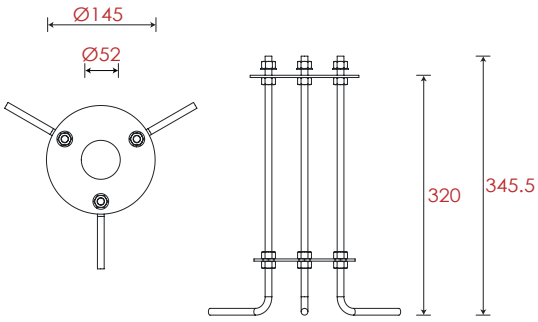

Item	Light Source	Lens	The manufacturer selected lens degree(°)θ1/2	Input voltage(V)	Typical operating current(mA)	Typical consumption(W)	Typical luminance(lm)	IK rate
B9EMC0859	4 × 3.5W × 2	FB11B4	N/A	DC 24 AC 120 AC 240	24V=630 × 2 120V=146 × 2 240V=73 × 2	24V=15 × 2 120V=17.5 × 2 240V=17 × 2	1206 × 2	07

Landscape / Street pole light
B3EMP0859

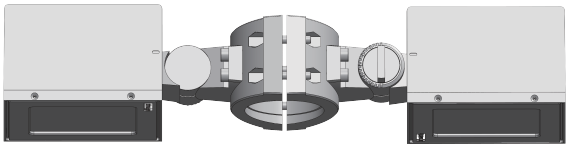

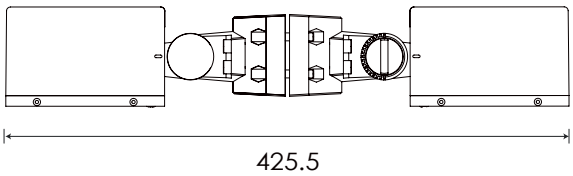

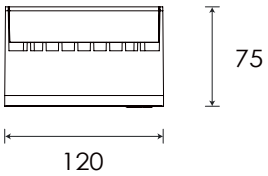

Specification

Housing	12# Die-Casting aluminum finishing or powder painting T=60-80μm.Adhesion of ISO class 1/ASTM class 4B.
Light Window	Tempered Glass.T=4mm
LED Driver	Constant Voltage Input, Constant Current Output
LED	SMD3535
Lens	Optical lens, efficiency≥85%
Power Cable	Outside of luminaire 12V/24V: H05RN-F 2×1.0mm², L=0.3m 120V/240V: H05RN-F 3×1.0mm², L=0.3m
Mounting Base	Powder coated die-casting aluminum
Dimming Support	TRIAC PWM Available 1-10V Dali Customized

Operating Restrict

- Temperature of water between -20˚C~40˚C

Lens

Item Code		Referenced Degree(°)θ1/2					
	FB11B4	**9°**	**15°**	**20°**	**30°**	**45°**	**60°**

Item	Light Source	Lens	The manufacturer selected lens degree(°)θ1/2	Input voltage(V)	Typical operating current(mA)	Typical consumption(W)	Typical luminance(lm)	IK rate
B3EMP0859	4 × 3.5W × 2	FB11B4	N/A	DC 24 AC 120 AC 240	24V=630 × 2 120V=146 × 2 240V=73 × 2	24V=15 × 2 120V=17.5 × 2 240V=17 × 2	1206 × 2	07

Photometric

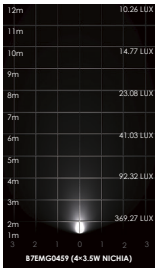

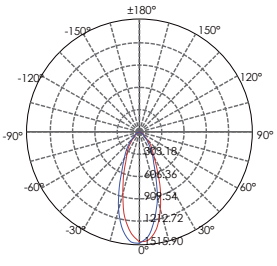

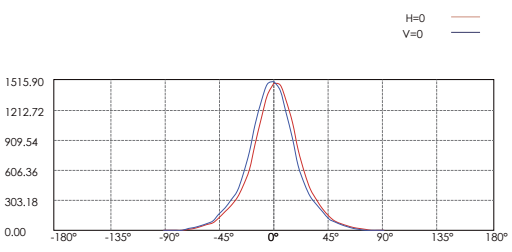

Lux distance Curve

Illuminance at a Distance

	Center Beam LUX	Beam Width V	Beam Width H
2m	369.27 LUX	1.4m	1.4m
4m	92.32 LUX	2.8m	2.8m
6m	41.03 LUX	4.2m	4.3m
8m	23.08 LUX	5.6m	5.7m
10m	14.77 LUX	7.0m	7.1m
12m	10.26 LUX	8.4m	8.5m

Vert.Spread:38.6 Horiz.Spread:39.0

Contact details

IINNO Ltd
Unit 7, 8/F., Tower B,
83 King Lam Street,
Lai Chi Kok, Kowloon,
Hong Kong
Tel: +852 2134 9906
+86 (0)769 23010151/2
M: +86 13922905402
Email: sales@iinno-lighting.com
www.iinno-lighting.com